SHARKBITE®

INSTALLATION INSTRUCTIONS

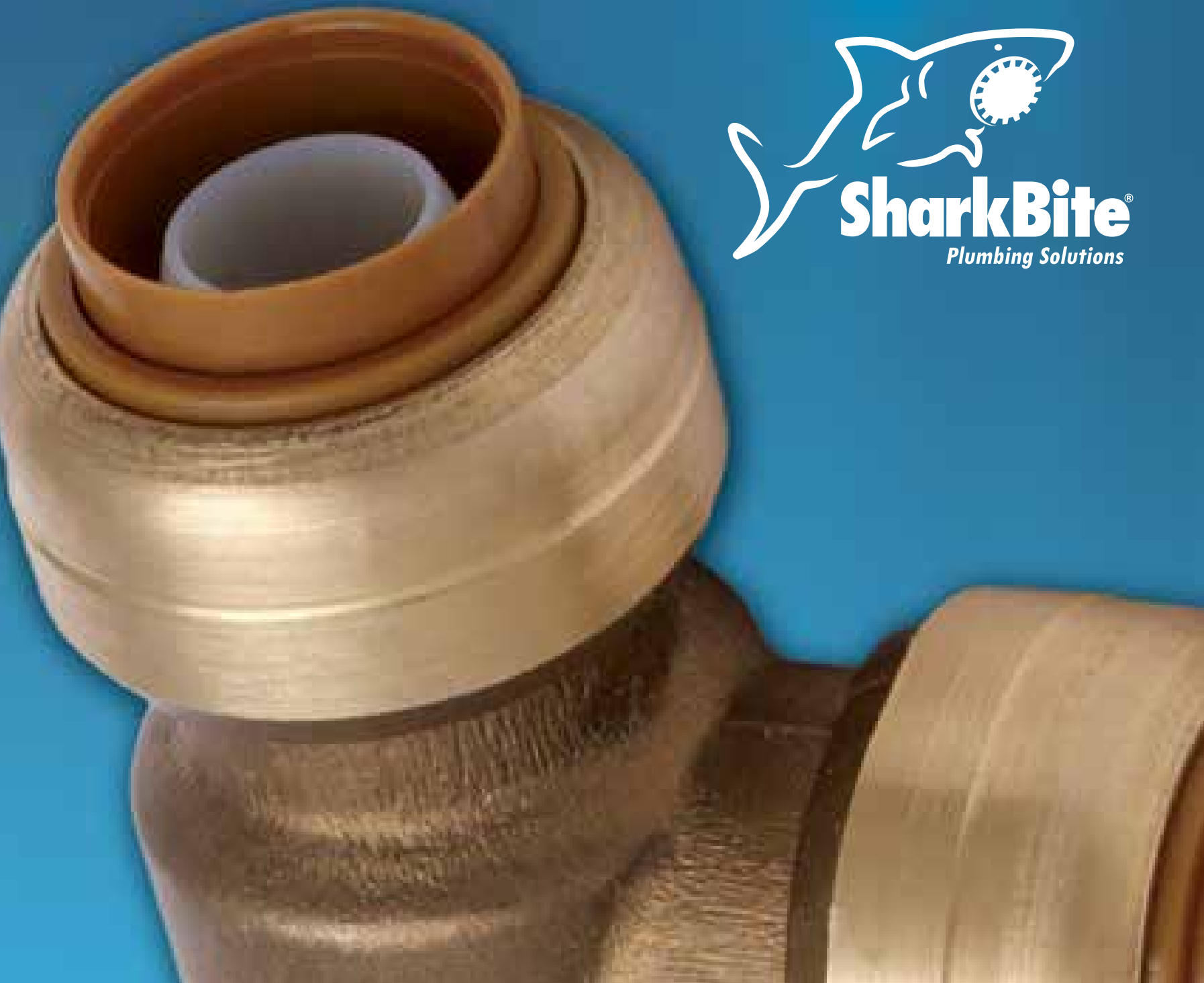

SharkBite®
Plumbing Solutions

THERE IS ONLY ONE TRUE SHARKBITE

The Very Best in Push-Fit Plumbing Solutions

CUT:
Cut the pipe square removing rough edges and debris. Mark the pipe to the correct insertion depth.

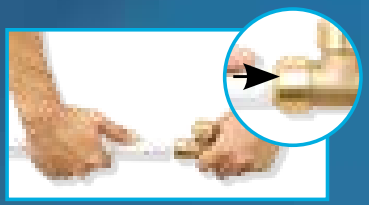

PUSH:
Push pipe and fitting together up to the depth mark.

DONE.

*Using the disconnect clip, fittings can be easily changed, removed and reused.

SHARKBITE® FITTINGS / TUBE SIZE COMPATIBILITY / PIPE INSERTION DEPTH

Nominal Size of Fitting	Nominal Size of Tubing	Tubing OD Size	Tubing ID Size	Pipe Insertion Decimal	Depth Fraction
1/4"	1/4" CTS	3/8"	0.305"	0.81"	13/16"
3/8"	3/8" CTS	1/2"	0.350"	0.94"	15/16"
1/2"	1/2" CTS	5/8"	0.475"	0.95"	15/16"
5/8"	5/8" CTS	3/4"	0.652"	1.13"	1-1/8"
3/4"	3/4" CTS	7/8"	0.671"	1.13"	1-1/8"
1"	1" CTS	1-1/8"	0.885"	1.32"	1-5/16"
1-1/4"	1-1/4" CTS	1-3/8"	1.055"	2.0"	2"
1-1/2"	1-1/2" CTS	1-5/8"	1.245"	2.25"	2-1/4"
2"	2" CTS	2-1/8"	1.629"	2.50"	2-1/2"
1/4" compression	1/4" ACR	1/4"	0.190"	n/a	
3/8" compression	3/8" ACR	3/8"	0.311"	n/a	

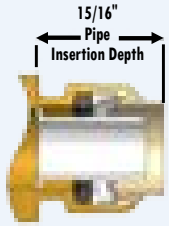

1/2" SharkBite End

- Connects COPPER, CPVC, PEX and PE-RT pipe in any combination
- SharkBite and SharkBite 2XL are Quick Connect and Quick Disconnect
- NO soldering, clamps, unions, glue or tools
- Certified to 200 psi and 200ºF
- Certified for underground* and behind the wall applications and as a manufactured joint without access panels
- Exceeds ASSE 1061 Section 1V, 4.1 Materials - Dezincification (DZR) - ISO 6509
- Certified for potable water and hydronic applications
- Integral PEX Stiffener (3/8" to 1"), 1/4" is not required
- 2XL PEX Stiffeners sold separately
- Fittings can be rotated after assembly for easier installation in tight places
- 1/4" push-fit connector ends require use of 3/8" OD CTS PEX, CPVC or hard drawn Type K, L and M and annealed Type M copper
- Chrome-plated copper cannot be used unless chrome is removed
- Always consult with local plumbing codes concerning specific applications

**Fitting should be wrapped with an impervious material, chloride-free tape or tightly wrapped and sealed insulation works well to prevent direct contact with the backfill. Backfill should be free of rocks, debris or any sharp objects that may cause damage through impact or abrasion.*

www.sharkbite.com

THE SHARKBITE® CONNECTION SYSTEM

The SharkBite® connection system uses an advanced push-fit design that works in two stages. When the tube is inserted into the fitting it passes the first stage through a release collar and then through a stainless steel grab ring. The grab ring has teeth that open out and grip onto the tube. At the second stage the tube is pushed through an o-ring protector which aligns the tube. A specially formulated o-ring is then compressed between the wall of the fitting and the tube before the end of the tube reaches the tube stop.

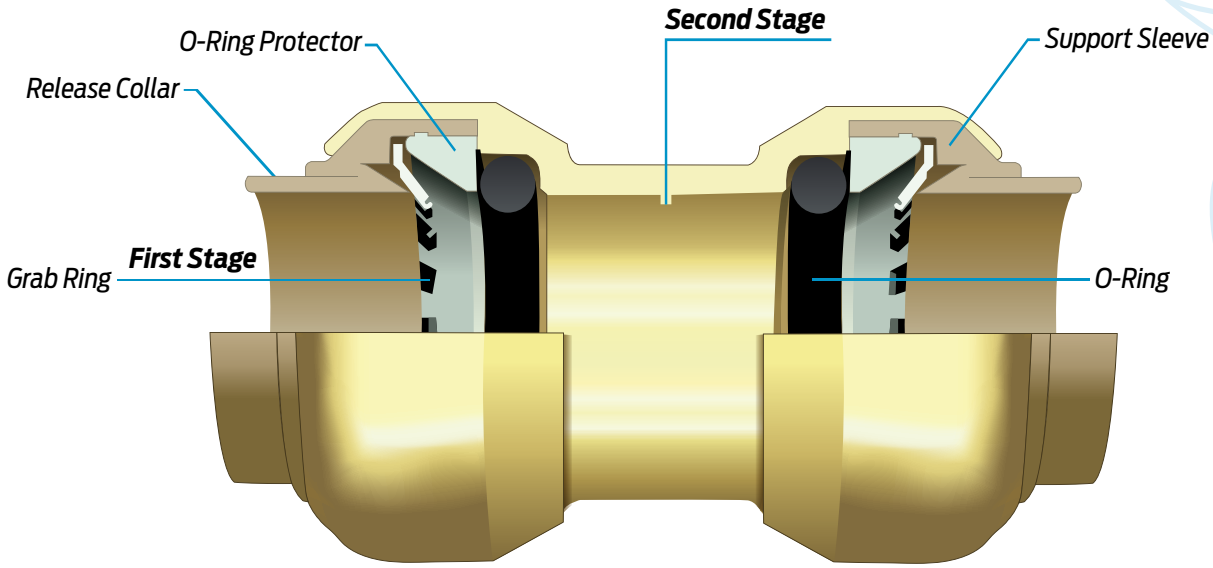

Only when the tube has passed through the o-ring and reaches the tube stop, is a secure joint created. The SharkBite® fittings can only be used with pipe/tubing certified to the following specifications:

- **PEX** (ASTM F876, CSA B137.5)
- **Copper** (ASTM B 88)
- **CPVC** (ASTM D 2846, CSA B137.6)

The SharkBite® fittings have an integral Tube Support Liner that is effective in supporting PEX tubing to ensure the o-ring seals correctly on the outside of the PEX tubing. The Tube Support Liner is not required for use with CPVC and copper tubing; however these two types of tubing fit over the Tube Support Liner easily and hold it against the tube stop. But the tube liner may be easily removed based on preference or local codes – see page 4 for details.

CONNECTING A SHARKBITE® JOINT

The following instructions must be followed to assemble the SharkBite® Connection System.

PREPARATION

Select the correct size fitting and tubing for the job. Check that fittings and tubing are clean, in good condition and are free from damage and foreign objects. Cut the tube so that the ends are square. Ensure that there are no burrs or damage to the cut end. Wherever possible proper tube cutting tools such as rotary tube cutters (copper tubing) or tube shears (for plastic tubing) should be used.

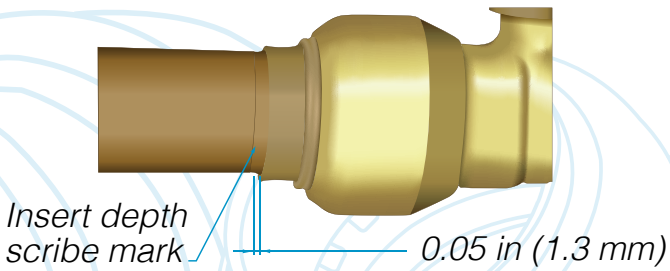

Once the tubing end is cut square and clean, use the SharkBite® Depth Deburr Gage (sold separately) and a permanent marker to mark the insert depth on the outside of the tubing. This mark is used to ensure that the joint is assembled correctly. To assemble correctly, the tubing needs to be pushed into the fitting until it meets the tube stop. Follow these three steps to insert the tubing into the fitting.

1. Insert the tube through the release collar to rest against the grab ring.

2. Push the tube firmly with a slight twisting action until it reaches the tube stop.

3. To ensure that the tube is correctly inserted, check that the depth mark is within 0.005 in (0.13 mm) of the end of the release collar.

DISCONNECTING A JOINT

Disconnection of the joint can only occur by using either the SharkBite® disconnect clip or the SharkBite® disconnect tongs. By applying pressure to the release collar with the clip or the disconnect tongs, the grab ring teeth are splayed. This action releases the tube, allowing it to be removed from the fitting.

1. Place the SharkBite® disconnect clip around the tube with the non-branded face against the release collar. If using the SharkBite® disconnect tongs, place the teeth around the fitting assembly. The fork end with the SharkBite® brand logo should be positioned around the tube and the other end around the neck of the fitting.

2. Push the clip against the release collar and pull the tube with a twisting action to release the tube. If using the SharkBite® disconnect tongs, squeeze the tool with one hand and pull the tube with a twisting action to release the tube.

3. Check the fitting and tube end for damage. The fitting and tubing should be free of damage, foreign objects and marks on the outside diameter. If the tubing is damaged or marked, then cut and use a new section of tubing.

PEX TUBE SUPPORT LINER REMOVAL

The tube liner is not necessary with CPVC or Copper tubing, and may be removed based on preference or local codes. The tube liner can be easily removed by pulling it past the o-ring, then with the aid of the SharkBite® disconnect clip or disconnect tongs (both sold separately), the Tube Support Liner can drop out of the fitting as it can move freely past the grab ring. Needle nosed pliers may be used to pull the Tube Support Liner out.

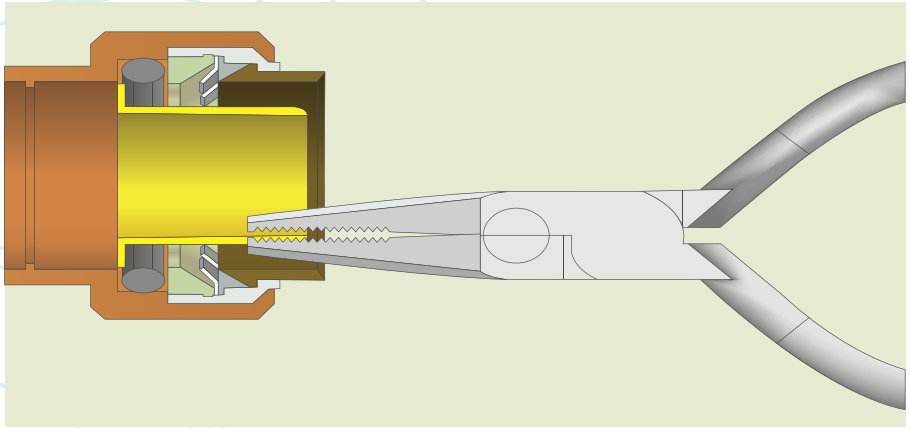

Gently work the Tube Support Liner past the o-ring

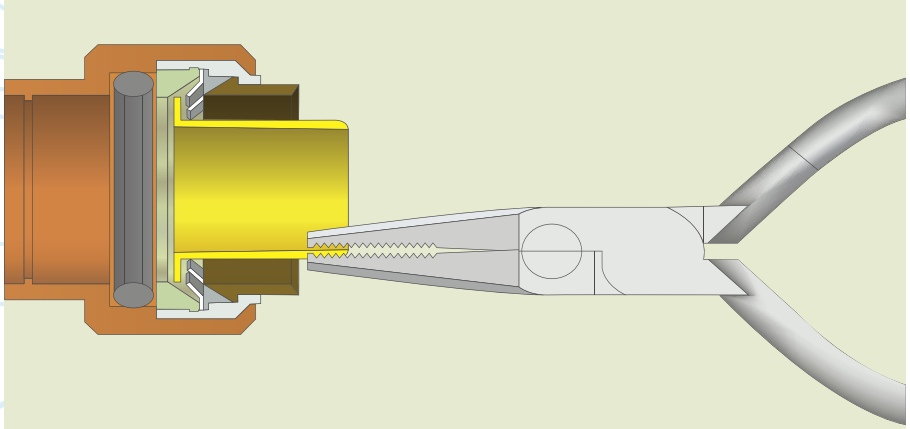

Stop once the Tube Support Liner has been pulled past the o-ring, the Tube Support Liner cannot be pulled out any further due to the grab ring.

PEX TUBE SUPPORT LINER REMOVAL, CONT.

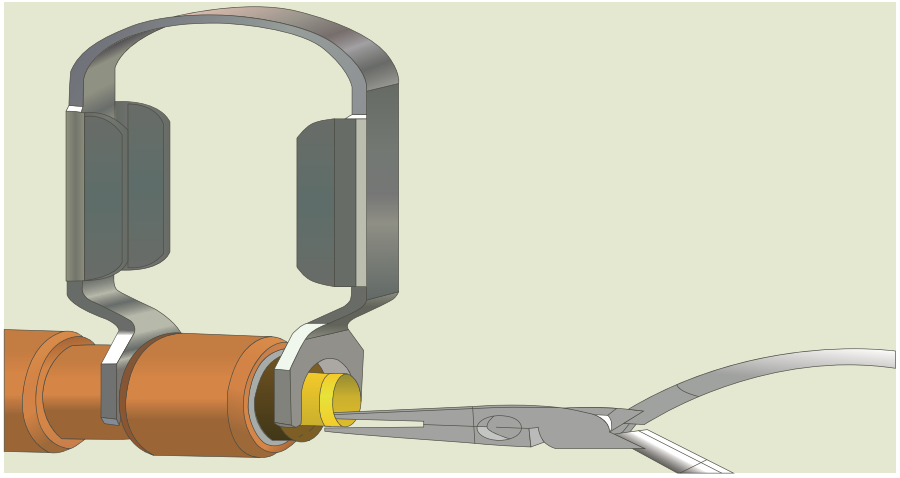

Put the disconnect tongs (or clip) in place and squeeze them together. This will cause the grab ring teeth to spread.

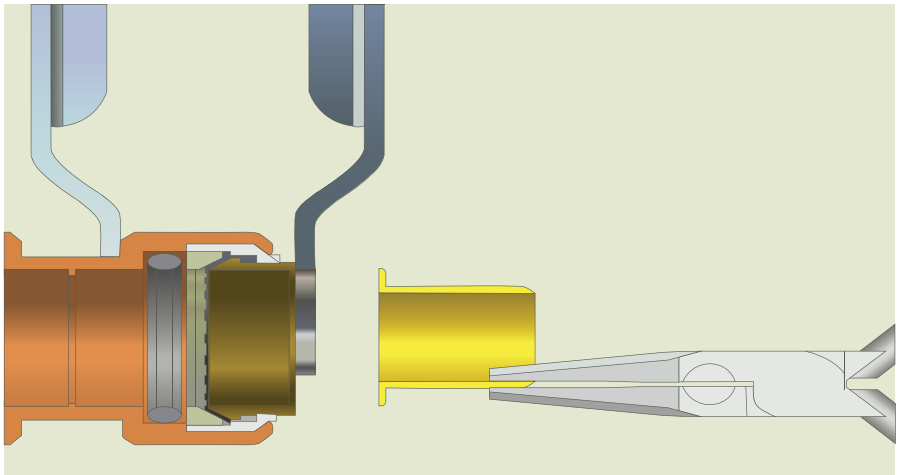

Once the disconnect tongs are squeezed and the grab ring teeth are spread, the Tube Support Liner can be easily removed.

Proposition 65 Warning: This product contains chemicals known to the State of California to cause cancer or birth defects or other reproductive harm. Notice to Installer/Contractor: California law requires this notice be provided to the consumer/end user of this product.

LIMITED WARRANTY – SHARKBITE® AND CASH ACME® PRODUCTS

What Does This Warranty Cover?

Subject to conditions outlined in this statement, RWC (in the USA, Reliance Worldwide Corporation and in Canada, Reliance Worldwide Canada Inc.) warrants SharkBite® and Cash Acme® products, when used and installed in accordance with the requirements set forth below, to be free from defects in material and workmanship for the applicable warranty period.

How Long Does The Warranty Coverage Last?

Product(s)	Warranty Period (from the date of sale)
SharkBite® PEX Tubing	Twenty-Five (25) years
SharkBite® Push-Fit Fittings	Twenty-Five (25) years
SharkBite® Brass PEX Barbed-Fittings	Five (5) years
SharkBite® Copper PEX Manifolds	Five (5) years
All other SharkBite® products	Two (2) years
All Cash Acme® products	One (1) year

Proof of purchase is required to validate the warranty period. If proof of purchase is not available, the warranty period shall default to the date of manufacture for each product. NOTE: Warranty is applicable to product installed in the country it was purchased.

What Are The Conditions Of This Warranty?

1. All products must be installed in accordance with all applicable codes and in accordance with any local, state, provincial or federal requirements.
2. The installing contractor must use construction techniques compliant with applicable codes to install the range of products and use the product(s) within the design parameters specified in any installation guidelines and technical notes for the applicable system. This shall include field pressure testing prior to concealing with concrete or by other means.
3. Products must not be installed in a system that may operate at temperatures or at pressures that exceed the printed rating on the product, packaging or installation instructions.
4. Evidence of tampering, mishandling, neglect, accidental damage, freeze damage or unauthorized modifications or repairs that cause damage to RWC warranted products void any warranty coverage of those particular products. It is expressly understood that failure as a result of any freezing fluids within the pipes does not constitute a defect in material or workmanship and shall not be covered by this warranty.
5. Although RWC provides a plumbing system to facilitate a complete installation, other manufacturers tubing and/or fittings may be installed in any given installation provided manufacturing of the tubing and/or fittings demonstrates compliance with the applicable ASTM standards, and the product has been certified by a recognized third-party testing agency. The RWC product in the given installation will continue to be covered under this warranty. NOTE: RWC will be responsible only for proven defects in material or workmanship in RWC products. Problems in products manufactured by another company should be reported to that manufacturer.

LIMITED WARRANTY – SHARKBITE® AND CASH ACME® PRODUCTS, CONT.

How Do You Get Service?
In order to be eligible for service under this warranty you must return the defective product (with shipping charges prepaid) to the original place of purchase. You also must include the model number of the product, the original date of purchase, proof of purchase and the nature of the problem. Products returned without shipping charges prepaid will be refused. For questions or inquires to the Manufacturer, in the U.S. call 1-877-700-4242 and in Canada 1-888-820-0120.

What Will RWC Do?
If, after inspection, we find that a product covered by this limited warranty has failed due to a defect in material or workmanship during the specified warranty period, we will repair or replace, at our sole option, free of charge, the defective product during normal working hours and through a place of business as determined by RWC. This shall constitute the sole and exclusive remedy for any defective product.

What Does This Warranty Not Cover?
RWC shall not be responsible for any incidental, indirect, contingent, special or consequential damages, including without limitation, lost profits or the cost of repairing or replacing other property which is damaged if these warranted products do not work properly, other costs resulting from labor charges, delays, vandalism, negligence, fouling caused by foreign material, damage from adverse water conditions, adverse chemical environments, or any other circumstances over which has no control. This limitation applies even if RWC could have foreseen or has been advised of the possibility of these damages. This warranty shall be invalidated by any abuse, misuse, misapplication or improper installation of the product.

How Does State/Provincial Law Apply?
Some States/Provinces do not allow limitations on how long an implied warranty lasts, and some States/Provinces do not allow the exclusion or limitation of incidental or consequential damages. Therefore, the above limitations may not apply to you. This Limited Warranty gives you the specific legal rights, and you may have other rights that vary from State/Province to State/Province. You should consult applicable State/Provincial laws to determine your rights.

SO FAR AS IS CONSISTENT WITH APPLICABLE STATE/PROVINCIAL/FEDERAL LAW, THE EXPRESS WARRANTY SET FORTH HEREIN IS THE ONLY WARRANTY GIVEN BY RWC WITH RESPECT TO THE SHARKBITE® AND CASH ACME® PRODUCTS AND RWC MAKES NO OTHER WARRANTIES, EXPRESSED OR IMPLIED, AND HEREBY SPECIFICALLY DISCLAIMS ALL OTHER WARRANTIES, EXPRESSED OR IMPLIED, INCLUDING BUT NOT LIMITED TO THE IMPLIED WARRANTIES OF MERCHANTABILITY AND FITNESS FOR A PARTICULAR PURPOSE.

Reliance Worldwide USA

2727 Paces Ferry Road SE Suite 1800 Building 2
Atlanta, GA 30339
Phone: 1-877-700-4242 • Fax: 1-877-700-4280
www.rwc.com

www.sharkbite.com | www.cashacme.com

Manufactured and Distributed by Reliance Worldwide Corporation