LIMITS & REQUIREMENTS OF USE:

1) H-CLASS HURRICANE PAD - FOR ALL COUNTIES WITH A MAXIMUM WIND SPEED UP TO 150 M.P.H.
2) THE PAD AND THE SUPPORTED EQUIPMENT MUST BE LOCATED AT GROUND LEVEL. THIS TABLE DOES NOT APPLY TO ROOFTOP EQUIPMENT, EQUIPMENT LOCATED ON BALCONIES, OR ANY OTHER EQUIPMENT TO BE ELEVATED ABOVE GROUND LEVEL.
3) THE AREA UNDER CONCERETE SLAB ON GROUND SHALL HAVE ALL MATERIALS REMOVED PRIOR TO INSTALLATION ON COMPACTED SOIL AS VERIFIED BY OTHERS. MINIMUM SOIL COEFFICIENT OF FRICTION = 0.25
4) MAXIMUM DIMENSIONS AND WEIGHT OF UNIT / EQUIPMENT SHALL CONFORM TO SPECIFICATIONS STATED HEREIN. PAD WEIGHT TO BE VERIFIED BY OTHERS.
5) O.E.M. INSTALLATION INSTRUCTIONS (INCL. O.E.M. CLIPS) SUPERSEDE HURRICANE PAD INSTALLATION INSTRUCTIONS & USE OF HC-1 CLIPS, IF MORE STRINGENT.
6) ELECTRICAL GROUND, WHEN REQUIRED, TO BE DESIGNED & INSTALLED BY OTHERS. ALL MECHANICAL SPECIFICATIONS (CLEAR SPACE, TONNAGE, ETC.) SHALL BE AS PER MANUFACTURER RECOMMENDATIONS AND ARE THE EXPRESS RESPONSIBILITY OF THE CONTRACTOR.
7) THE ROLE OF THIS ENGINEER FOR THIS PROJECT IS THAT OF SPECIALTY ENGINEER AND NOT THE ENGINEER OF RECORD. CONSEQUENTLY, THE ARCHITECT/ENGINEER OF RECORD SHALL BE RESPONSIBLE FOR THE INTEGRITY OF ALL SUPPORTING SURFACES TO THIS DESIGN WHICH SHALL BE COORDINATED BY THE PERMITTING CONTRACTOR.
8) ENGINEER SEAL AFFIXED HERETO VALIDATES STRUCTURAL DESIGN AS SHOWN. USE OF THIS SPEC. BY CONTRACTOR, et. al. INDEMNIFIES & SAVES HARMLESS THIS ENGINEER FOR ALL COST & DAMAGES INCLUDING LEGAL FEES & APPELLATE FEES RESULTING FROM MATERIAL FABRICATION, SYSTEM ERECTION, CONSTRUCTION PRACTICES BEYOND THAT WHICH IS CALLED FOR BY LOCAL, STATE, & FEDERAL CODES & FROM DEVIATIONS OF THIS PLAN.
9) THIS ENGINEER SHALL NOT BE HELD RESPONSIBLE/LIABLE IN ANY WAY FOR ERRONEOUS OR INACCURATE DATA OR MEASUREMENTS. DIMENSIONS ARE SHOWN TO ILLUSTRATE DESIGN FORCES AND OTHER DESIGN CRITERIA. THEY MAY VARY SLIGHTLY, BUT MUST REMAIN WITHIN THE LIMITATIONS SPECIFIED HEREIN.
10) THIS DOCUMENT IS GENERIC AND DOES NOT PERTAIN TO ANY SPECIFIC PROJECT SITE.
11) PADS / UNITS INSTALLED DIRECTLY ON ANY COASTLINE REQUIRE A HEAVIER AND LARGER PAD TO ACCOUNT FOR EXPOSURE D ; Table 28.3-1; Kz = 1.03
12) ALL OTHER UNITS NOT SHOWN SHALL BE DESIGNED ON A CASE BY CASE BASIS.
13) ALTERATIONS OR ADDITIONS TO THIS DOCUMENT ARE NOT PERMITTED AND INVALIDATE THIS CERTIFICATION.
14) EXCEPT AS EXPRESSLY PROVIDED HEREIN, NO ADDITIONAL CERTIFICATIONS OR AFFIRMATIONS ARE INTENDED.
15) PADS ARE CONSTRUCTED WITH PRECAST CONCRETE, MINIMUM COMPRESSIVE STRENGTH, f'c=7,000 PSI AT 28 DAYS.
16) THIS ENGINEER SHALL BE GIVEN AN OPPORTUNITY TO RE-EVALUATE THIS WORK UPON DISCOVERY OF INACCURATE INFORMATION PRIOR TO MODIFICATION OF EXISTING FIELD CONDITIONS AND FABRICATION AND INSTALLATION OF MATERIALS.

ENGINEERING DATA:

1) ANALYSES PER 6th EDITION (2017) FLORIDA BUILDING CODE - SECTION 1620 HIGH VELOCITY HURRICANE ZONES.
2) WIND LOADS & LOAD COMBINATIONS PER ASCE 7-10 SECTION 2.4.1 (LOAD COMBINATIONS), SECTION 29.5 & FIGURE 29.5.1 FOR: WIND LOADS ON OTHER STRUCTURES.
3) EQUIP. TO BE ANCHORED TO PAD USING (8) DIVERSITECH HC-1 (OR O.E.M. CLIPS) CENTER ALL EQUIPMENT ON PADS. ATTACH CLIPS TO EQUIP (22 GAGE METAL MIN) WITH 1/4" BLUE / WHITE OR STAINLESS TAPCON CONCRETE ANCHORS WITH MINIMUM OF 1" EMBEDMENT. MINIMUM TAPCON SPECIFICATION: 700 LB PULLOUT / 900 LB SHEAR.
4) ALL EQUIPMENT REQUIRING TWO PADS ARE TO USE (12) TOTAL HC-1 CLIPS, FOUR (4) PER LENGTH AND TWO (2) PER WIDTH.
5) RISK CATEGORY = II TABLE 1604.5 - RISK CATEGORY OF BUILDINGS AND OTHER STRUCTURES, SECTION 301.15 OF THE MECHANICAL CODE, WIND RESISTANCE, AND 553.844 OF THE FLORIDA STATUTES STORM LOSS MITIGATION.

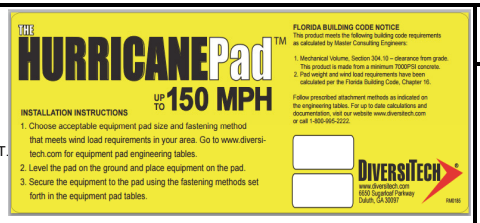

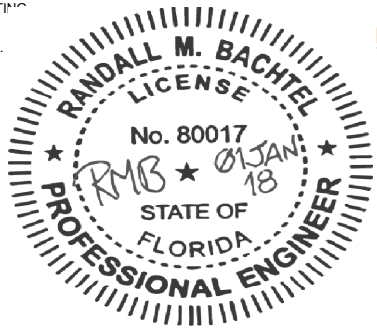

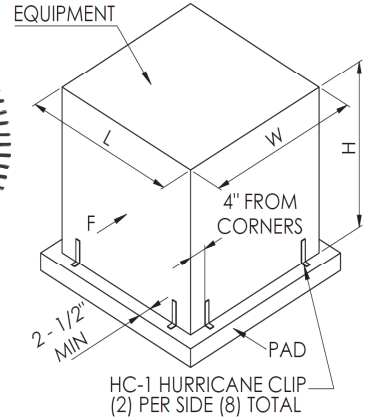

H-CLASS TO PAD MODEL#	PAD THICKNESS (in) = 4 WEIGHT	WIDTH	LENGTH
H1840-4	92	18	40
H2424-4	50	24	24
H2436-4	70	24	36
H3030-4	70	30	30
H3060-4	135	30	60
H3232-4	87	32	32
H3345-4	125	33	45
H3434-4	94	34	34
H3636-4	100	36	36
H3642-4	117	36	42
H3648-4	133	36	48
H3652-4	140	36	52
H3842-4	158	38	42
H3852-4	145	38	52
H3865-4	170	38	65
H4040-4	140	40	40
H4242-4	145	42	42
H4558-4	180	45	58
H5557-4	240	55	57
ZH4272*	234	42	72
ZH5890**	360	58	90

WIND LOAD CALCS:

Wind Speed V = ***150*** MPH
F = qz*G*Cf*Af (Eq. 29.5-2) = 49.07 *Af (lbs)
qz = 0.00256*Kz*Kzt*Kd*V^2 = 44.06 PSF
Exposure C ; Table 28.3-1 Kz = 0.85
Figure 26.8-1 Kzt = 1.00
Table 26.6-1 Kd = 0.90
Figure 29.5-1 Cf = 1.31
G = 0.85

DiversiTech Corporation
6650 Sugarloaf Parkway #100
Duluth, GA 30097 (800) 397-4823

RMB ENGINEERING LLC
Solving Problems to Minimize the Stress of Doing Business

SPECIAL PAD CONFIG.
* INDICATES TWO H3642-4 PADS USED IN A 42" x 72" SHAPE
** INDICATES TWO H4558-4 PADS USED IN A 58" x 90" SHAPE

ROW #	UNIT / EQUIPMENT MAXIMUM DIMENSIONS INCHES WIDTH	LENGTH	HEIGHT	EQUIPMENT MINIMUM WEIGHT LBS.	HURRICANE H-CLASS PAD USED MODEL NUMBER	WEIGHT LBS.	PAD WIDTH IN.	PAD LENGTH IN.	PAD THICK IN.	150 MPH WIND LOAD LBS.	0.6(WIND MOMENT) FT-LBS.	0.6(UNIT+ PAD) WEIGHT LBS.	RESISTING MOMENT FT-LBS.	DESIGN CHECK		
1	13.0	35.0	20.0	89	H3060-4	135	30	60	4.0	239	168	135	168	OK FOR	150	MPH
2	13.0	35.0	20.0	282	H1840-4	92	18	40	4.0	239	168	224	168	OK FOR	150	MPH
3	13.0	35.0	22.0	129	H3060-4	135	30	60	4.0	263	198	159	198	OK FOR	150	MPH
4	13.0	35.0	22.0	348	H1840-4	92	18	40	4.0	263	198	264	198	OK FOR	150	MPH
5	13.0	35.0	24.0	172	H3060-4	135	30	60	4.0	287	230	184	231	OK FOR	150	MPH
6	13.0	35.0	24.0	420	H1840-4	92	18	40	4.0	287	230	307	230	OK FOR	150	MPH
7	23.2	23.2	25.4	88	H3060-4	135	30	60	4.0	200	167	134	167	OK FOR	150	MPH
8	23.2	23.2	25.4	153	H3030-4	70	30	30	4.0	200	167	134	167	OK FOR	150	MPH
9	23.2	23.2	28.7	99	H3648-4	133	36	48	4.0	227	208	139	209	OK FOR	150	MPH
10	23.2	23.2	28.7	132	H3636-4	100	36	36	4.0	227	208	139	209	OK FOR	150	MPH
11	24.8	24.8	28.7	108	H3652-4	140	36	52	4.0	243	223	149	223	OK FOR	150	MPH
12	24.8	24.8	28.7	148	H3636-4	100	36	36	4.0	243	223	149	223	OK FOR	150	MPH
13	25.8	25.8	25.4	101	H3345-4	125	33	45	4.0	223	186	136	186	OK FOR	150	MPH
14	25.8	25.8	25.4	178	H3030-4	70	30	30	4.0	223	186	149	186	OK FOR	150	MPH
15	25.8	25.8	28.7	86	H3842-4	158	38	42	4.0	252	232	147	232	OK FOR	150	MPH
16	25.8	25.8	28.7	158	H3636-4	100	36	36	4.0	252	232	155	232	OK FOR	150	MPH
17	25.8	25.8	32.4	76	H4558-4	180	45	58	4.0	284	287	153	288	OK FOR	150	MPH
18	25.8	25.8	32.4	148	H4040-4	140	40	40	4.0	284	287	173	288	OK FOR	150	MPH
19	25.8	25.8	32.4	133	H3865-4	170	38	65	4.0	285	287	182	288	OK FOR	150	MPH
20	25.8	25.8	32.4	220	H3636-4	100	36	36	4.0	285	287	192	288	OK FOR	150	MPH
21	29.3	33.0	39.8	150	H5557-4	240	55	57	4.0	448	536	234	536	OK FOR	150	MPH
22	29.3	33.0	39.8	297	H4558-4	180	45	58	4.0	448	536	286	536	OK FOR	150	MPH
23	31.0	55.0	27.0	297	H3865-4	170	38	65	4.0	506	443	280	443	OK FOR	150	MPH
24	31.0	55.0	31.0	306	ZH4272*	234	42	72	4.0	581	567	324	567	OK FOR	150	MPH
25	31.2	31.2	25.4	80	H3842-4	158	38	42	4.0	270	226	143	226	OK FOR	150	MPH

LIMITS & REQUIREMENTS OF USE:

1) H-CLASS HURRICANE PAD - FOR ALL COUNTIES WITH A MAXIMUM WIND SPEED UP TO 150 M.P.H.
2) THE PAD AND THE SUPPORTED EQUIPMENT MUST BE LOCATED AT GROUND LEVEL. THIS TABLE DOES NOT APPLY TO ROOFTOP EQUIPMENT, EQUIPMENT LOCATED ON BALCONIES, OR ANY OTHER EQUIPMENT TO BE ELEVATED ABOVE GROUND LEVEL.
3) THE AREA UNDER CONCERETE SLAB ON GROUND SHALL HAVE ALL MATERIALS REMOVED PRIOR TO INSTALLATION ON COMPACTED SOIL AS VERIFIED BY OTHERS. MINIMUM SOIL COEFFICIENT OF FRICTION = 0.25
4) MAXIMUM DIMENSIONS AND WEIGHT OF UNIT / EQUIPMENT SHALL CONFORM TO SPECIFICATIONS STATED HEREIN. PAD WEIGHT TO BE VERIFIED BY OTHERS.
5) O.E.M. INSTALLATION INSTRUCTIONS (INCL. O.E.M. CLIPS) SUPERSEDE HURRICANE PAD INSTALLATION INSTRUCTIONS & USE OF HC-1 CLIPS, IF MORE STRINGENT.
6) ELECTRICAL GROUND, WHEN REQUIRED, TO BE DESIGNED & INSTALLED BY OTHERS. ALL MECHANICAL SPECIFICATIONS (CLEAR SPACE, TONNAGE, ETC.) SHALL BE AS PER MANUFACTURER RECOMMENDATIONS AND ARE THE EXPRESS RESPONSIBILITY OF THE CONTRACTOR.
7) THE ROLE OF THIS ENGINEER FOR THIS PROJECT IS THAT OF SPECIALTY ENGINEER AND NOT THE ENGINEER OF RECORD. CONSEQUENTLY, THE ARCHITECT/ENGINEER OF RECORD SHALL BE RESPONSIBLE FOR THE INTEGRITY OF ALL SUPPORTING SURFACES TO THIS DESIGN WHICH SHALL BE COORDINATED BY THE PERMITTING CONTRACTOR.
8) ENGINEER SEAL AFFIXED HERETO VALIDATES STRUCTURAL DESIGN AS SHOWN. USE OF THIS SPEC. BY CONTRACTOR, et. al. INDEMNIFIES & SAVES HARMLESS THIS ENGINEER FOR ALL COST & DAMAGES INCLUDING LEGAL FEES & APPELLATE FEES RESULTING FROM MATERIAL FABRICATION, SYSTEM ERECTION, CONSTRUCTION PRACTICES BEYOND THAT WHICH IS CALLED FOR BY LOCAL, STATE, & FEDERAL CODES & FROM DEVIATIONS OF THIS PLAN.
9) THIS ENGINEER SHALL NOT BE HELD RESPONSIBLE/LIABLE IN ANY WAY FOR ERRONEOUS OR INACCURATE DATA OR MEASUREMENTS. DIMENSIONS ARE SHOWN TO ILLUSTRATE DESIGN FORCES AND OTHER DESIGN CRITERIA. THEY MAY VARY SLIGHTLY, BUT MUST REMAIN WITHIN THE LIMITATIONS SPECIFIED HEREIN.
10) THIS DOCUMENT IS GENERIC AND DOES NOT PERTAIN TO ANY SPECIFIC PROJECT SITE.
11) PADS / UNITS INSTALLED DIRECTLY ON ANY COASTLINE REQUIRE A HEAVIER AND LARGER PAD TO ACCOUNT FOR EXPOSURE D ; Table 28.3-1; Kz = 1.03
12) ALL OTHER UNITS NOT SHOWN SHALL BE DESIGNED ON A CASE BY CASE BASIS.
13) ALTERATIONS OR ADDITIONS TO THIS DOCUMENT ARE NOT PERMITTED AND INVALIDATE THIS CERTIFICATION.
14) EXCEPT AS EXPRESSLY PROVIDED HEREIN, NO ADDITIONAL CERTIFICATIONS OR AFFIRMATIONS ARE INTENDED.
15) PADS ARE CONSTRUCTED WITH PRECAST CONCRETE, MINIMUM COMPRESSIVE STRENGTH, f'c=7,000 PSI AT 28 DAYS.
16) THIS ENGINEER SHALL BE GIVEN AN OPPORTUNITY TO RE-EVALUATE THIS WORK UPON DISCOVERY OF INACCURATE INFORMATION PRIOR TO MODIFICATION OF EXISTING FIELD CONDITIONS AND FABRICATION AND INSTALLATION OF MATERIALS.

ENGINEERING DATA:

1) ANALYSES PER 6th EDITION (2017) FLORIDA BUILDING CODE - SECTION 1620 HIGH VELOCITY HURRICANE ZONES.
2) WIND LOADS & LOAD COMBINATIONS PER ASCE 7-10 SECTION 2.4.1 (LOAD COMBINATIONS), SECTION 29.5 & FIGURE 29.5.1 FOR: WIND LOADS ON OTHER STRUCTURES.
3) EQUIP. TO BE ANCHORED TO PAD USING (8) DIVERSITECH HC-1 (OR O.E.M. CLIPS) CENTER ALL EQUIPMENT ON PADS. ATTACH CLIPS TO EQUIP (22 GAGE METAL MIN) WITH 1/4" BLUE / WHITE OR STAINLESS TAPCON CONCRETE ANCHORS WITH MINIMUM OF 1" EMBEDMENT. MINIMUM TAPCON SPECIFICATION: 700 LB PULLOUT / 900 LB SHEAR.
4) ALL EQUIPMENT REQUIRING TWO PADS ARE TO USE (12) TOTAL HC-1 CLIPS, FOUR (4) PER LENGTH AND TWO (2) PER WIDTH.
5) RISK CATEGORY = II TABLE 1604.5 - RISK CATEGORY OF BUILDINGS AND OTHER STRUCTURES, SECTION 301.15 OF THE MECHANICAL CODE, WIND RESISTANCE, AND 553.844 OF THE FLORIDA STATUTES STORM LOSS MITIGATION.

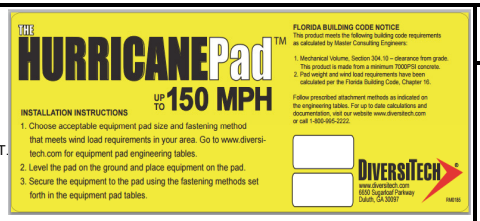

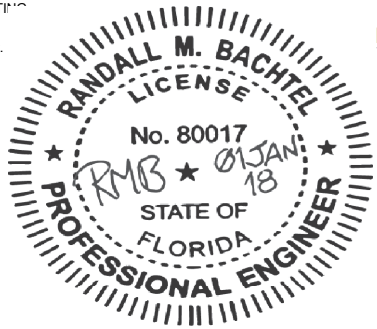

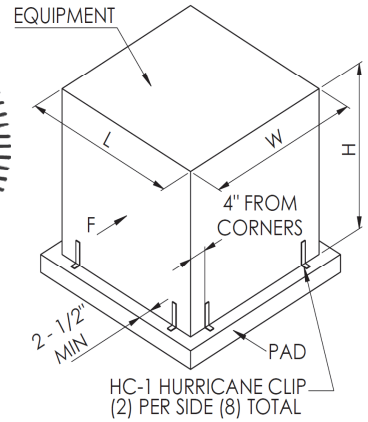

H-CLASS TO PAD MODEL#	PAD THICKNESS (in) = 4 WEIGHT	WIDTH	LENGTH
H1840-4	92	18	40
H2424-4	50	24	24
H2436-4	70	24	36
H3030-4	70	30	30
H3060-4	135	30	60
H3232-4	87	32	32
H3345-4	125	33	45
H3434-4	94	34	34
H3636-4	100	36	36
H3642-4	117	36	42
H3648-4	133	36	48
H3652-4	140	36	52
H3842-4	158	38	42
H3852-4	145	38	52
H3865-4	170	38	65
H4040-4	140	40	40
H4242-4	145	42	42
H4558-4	180	45	58
H5557-4	240	55	57
ZH4272*	234	42	72
ZH5890**	360	58	90

WIND LOAD CALCS:

Wind Speed V = ***150*** MPH
F = qz*G*Cf*Af (Eq. 29.5-2) = 49.07 *Af (lbs)
qz = 0.00256*Kz*Kzt*Kd*V^2 = 44.06 PSF
Exposure C ; Table 28.3-1 Kz = 0.85
Figure 26.8-1 Kzt = 1.00
Table 26.6-1 Kd = 0.90
Figure 29.5-1 Cf = 1.31
G = 0.85

DiversiTech Corporation
6650 Sugarloaf Parkway #100
Duluth, GA 30097 (800) 397-4823

RMB ENGINEERING LLC
Solving Problems to Minimize the Stress of Doing Business

SPECIAL PAD CONFIG.
* INDICATES TWO H3642-4 PADS USED IN A 42" x 72" SHAPE
** INDICATES TWO H4558-4 PADS USED IN A 58" x 90" SHAPE

ROW #	UNIT / EQUIPMENT MAXIMUM DIMENSIONS INCHES WIDTH	LENGTH	HEIGHT	EQUIPMENT MINIMUM WEIGHT LBS.	HURRICANE H-CLASS PAD USED MODEL NUMBER	WEIGHT LBS.	PAD WIDTH IN.	PAD LENGTH IN.	PAD THICK IN.	150 MPH WIND LOAD LBS.	0.6(WIND MOMENT) FT-LBS.	0.6(UNIT+ PAD) WEIGHT LBS.	RESISTING MOMENT FT-LBS.	DESIGN CHECK
26	31.2	31.2	25.4	151	H3636-4	100	36	36	4.0	270	226	151	226	OK FOR 150 MPH
27	31.2	31.2	28.4	131	H3842-4	158	38	42	4.0	302	275	174	275	OK FOR 150 MPH
28	31.2	31.2	28.4	206	H3636-4	100	36	36	4.0	302	275	183	275	OK FOR 150 MPH
29	31.2	31.2	29.0	143	H3842-4	158	38	42	4.0	309	285	181	286	OK FOR 150 MPH
30	31.2	31.2	29.0	218	H3636-4	100	36	36	4.0	309	285	191	286	OK FOR 150 MPH
31	31.2	31.2	30.0	18	H5557-4	240	55	57	4.0	320	304	155	355	OK FOR 150 MPH
32	31.2	31.2	30.0	165	H4040-4	140	40	40	4.0	320	304	183	305	OK FOR 150 MPH
33	31.2	31.2	30.0	163	H3842-4	158	38	42	4.0	320	304	193	305	OK FOR 150 MPH
34	31.2	31.2	30.0	239	H3636-4	100	36	36	4.0	320	304	203	305	OK FOR 150 MPH
35	31.2	31.2	32.4	130	H4558-4	180	45	58	4.0	345	348	186	348	OK FOR 150 MPH
36	31.2	31.2	32.4	208	H4040-4	140	40	40	4.0	345	348	209	348	OK FOR 150 MPH
37	31.2	31.2	32.4	130	H4558-4	180	45	58	4.0	345	348	186	349	OK FOR 150 MPH
38	31.2	31.2	32.4	209	H4040-4	140	40	40	4.0	345	348	209	349	OK FOR 150 MPH
39	31.2	31.2	32.4	130	H4558-4	180	45	58	4.0	345	348	186	349	OK FOR 150 MPH
40	31.2	31.2	32.4	209	H4040-4	140	40	40	4.0	345	348	209	349	OK FOR 150 MPH
41	31.2	31.2	35.8	64	H5557-4	240	55	57	4.0	381	417	182	418	OK FOR 150 MPH
42	31.2	31.2	35.8	192	H4558-4	180	45	58	4.0	381	417	223	418	OK FOR 150 MPH
43	31.2	31.2	35.8	278	H4040-4	140	40	40	4.0	381	417	251	418	OK FOR 150 MPH
44	31.2	31.2	39.2	258	H4558-4	180	45	58	4.0	417	492	263	493	OK FOR 150 MPH
45	31.2	31.2	39.2	118	H5557-4	240	55	57	4.0	417	492	215	493	OK FOR 150 MPH
46	31.2	31.2	39.2	324	H4242-4	145	42	42	4.0	417	492	281	492	OK FOR 150 MPH
47	31.2	35.0	28.4	149	H4242-4	145	42	42	4.0	339	308	176	308	OK FOR 150 MPH
48	31.2	35.0	28.4	226	H3642-4	117	36	42	4.0	339	308	206	308	OK FOR 150 MPH
49	*33.8*	*33.8*	*35*	*205*	H4558-4	*180*	*45*	*58*	*4.0*	*402*	*433*	*231*	*433*	*OK FOR 150 MPH*
50	*33.8*	*33.8*	*39*	*144*	H5557-4	*240*	*55*	*57*	*4.0*	*448*	*527*	*230*	*528*	*OK FOR 150 MPH*

LIMITS & REQUIREMENTS OF USE:

1) H-CLASS HURRICANE PAD - FOR ALL COUNTIES WITH A MAXIMUM WIND SPEED UP TO 150 M.P.H.
2) THE PAD AND THE SUPPORTED EQUIPMENT MUST BE LOCATED AT GROUND LEVEL. THIS TABLE DOES NOT APPLY TO ROOFTOP EQUIPMENT, EQUIPMENT LOCATED ON BALCONIES, OR ANY OTHER EQUIPMENT TO BE ELEVATED ABOVE GROUND LEVEL.
3) THE AREA UNDER CONCERETE SLAB ON GROUND SHALL HAVE ALL MATERIALS REMOVED PRIOR TO INSTALLATION ON COMPACTED SOIL AS VERIFIED BY OTHERS. MINIMUM SOIL COEFFICIENT OF FRICTION = 0.25
4) MAXIMUM DIMENSIONS AND WEIGHT OF UNIT / EQUIPMENT SHALL CONFORM TO SPECIFICATIONS STATED HEREIN. PAD WEIGHT TO BE VERIFIED BY OTHERS.
5) O.E.M. INSTALLATION INSTRUCTIONS (INCL. O.E.M. CLIPS) SUPERSEDE HURRICANE PAD INSTALLATION INSTRUCTIONS & USE OF HC-1 CLIPS, IF MORE STRINGENT.
6) ELECTRICAL GROUND, WHEN REQUIRED, TO BE DESIGNED & INSTALLED BY OTHERS. ALL MECHANICAL SPECIFICATIONS (CLEAR SPACE, TONNAGE, ETC.) SHALL BE AS PER MANUFACTURER RECOMMENDATIONS AND ARE THE EXPRESS RESPONSIBILITY OF THE CONTRACTOR.
7) THE ROLE OF THIS ENGINEER FOR THIS PROJECT IS THAT OF SPECIALTY ENGINEER AND NOT THE ENGINEER OF RECORD. CONSEQUENTLY, THE ARCHITECT/ENGINEER OF RECORD SHALL BE RESPONSIBLE FOR THE INTEGRITY OF ALL SUPPORTING SURFACES TO THIS DESIGN WHICH SHALL BE COORDINATED BY THE PERMITTING CONTRACTOR.
8) ENGINEER SEAL AFFIXED HERETO VALIDATES STRUCTURAL DESIGN AS SHOWN. USE OF THIS SPEC. BY CONTRACTOR, et. al. INDEMNIFIES & SAVES HARMLESS THIS ENGINEER FOR ALL COST & DAMAGES INCLUDING LEGAL FEES & APPELLATE FEES RESULTING FROM MATERIAL FABRICATION, SYSTEM ERECTION, CONSTRUCTION PRACTICES BEYOND THAT WHICH IS CALLED FOR BY LOCAL, STATE, & FEDERAL CODES & FROM DEVIATIONS OF THIS PLAN.
9) THIS ENGINEER SHALL NOT BE HELD RESPONSIBLE/LIABLE IN ANY WAY FOR ERRONEOUS OR INACCURATE DATA OR MEASUREMENTS. DIMENSIONS ARE SHOWN TO ILLUSTRATE DESIGN FORCES AND OTHER DESIGN CRITERIA. THEY MAY VARY SLIGHTLY, BUT MUST REMAIN WITHIN THE LIMITATIONS SPECIFIED HEREIN.
10) THIS DOCUMENT IS GENERIC AND DOES NOT PERTAIN TO ANY SPECIFIC PROJECT SITE.
11) PADS / UNITS INSTALLED DIRECTLY ON ANY COASTLINE REQUIRE A HEAVIER AND LARGER PAD TO ACCOUNT FOR EXPOSURE D ; Table 28.3-1; Kz = 1.03
12) ALL OTHER UNITS NOT SHOWN SHALL BE DESIGNED ON A CASE BY CASE BASIS.
13) ALTERATIONS OR ADDITIONS TO THIS DOCUMENT ARE NOT PERMITTED AND INVALIDATE THIS CERTIFICATION.
14) EXCEPT AS EXPRESSLY PROVIDED HEREIN, NO ADDITIONAL CERTIFICATIONS OR AFFIRMATIONS ARE INTENDED.
15) PADS ARE CONSTRUCTED WITH PRECAST CONCRETE, MINIMUM COMPRESSIVE STRENGTH, f'c=7,000 PSI AT 28 DAYS.
16) THIS ENGINEER SHALL BE GIVEN AN OPPORTUNITY TO RE-EVALUATE THIS WORK UPON DISCOVERY OF INACCURATE INFORMATION PRIOR TO MODIFICATION OF EXISTING FIELD CONDITIONS AND FABRICATION AND INSTALLATION OF MATERIALS.

ENGINEERING DATA:

1) ANALYSES PER 6th EDITION (2017) FLORIDA BUILDING CODE - SECTION 1620 HIGH VELOCITY HURRICANE ZONES.
2) WIND LOADS & LOAD COMBINATIONS PER ASCE 7-10 SECTION 2.4.1 (LOAD COMBINATIONS), SECTION 29.5 & FIGURE 29.5.1 FOR: WIND LOADS ON OTHER STRUCTURES.
3) EQUIP. TO BE ANCHORED TO PAD USING (8) DIVERSITECH HC-1 (OR O.E.M. CLIPS) CENTER ALL EQUIPMENT ON PADS. ATTACH CLIPS TO EQUIP (22 GAGE METAL MIN) WITH 1/4" BLUE / WHITE OR STAINLESS TAPCON CONCRETE ANCHORS WITH MINIMUM OF 1" EMBEDMENT. MINIMUM TAPCON SPECIFICATION: 700 LB PULLOUT / 900 LB SHEAR.
4) ALL EQUIPMENT REQUIRING TWO PADS ARE TO USE (12) TOTAL HC-1 CLIPS, FOUR (4) PER LENGTH AND TWO (2) PER WIDTH.
5) RISK CATEGORY = II TABLE 1604.5 - RISK CATEGORY OF BUILDINGS AND OTHER STRUCTURES, SECTION 301.15 OF THE MECHANICAL CODE, WIND RESISTANCE, AND 553.844 OF THE FLORIDA STATUTES STORM LOSS MITIGATION.

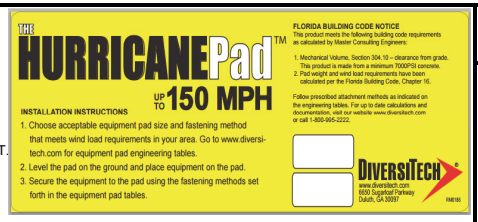

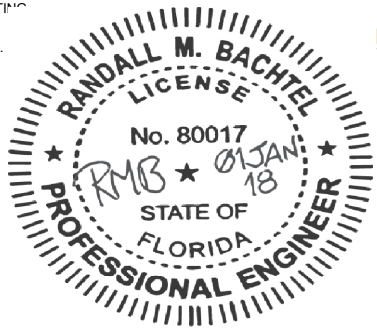

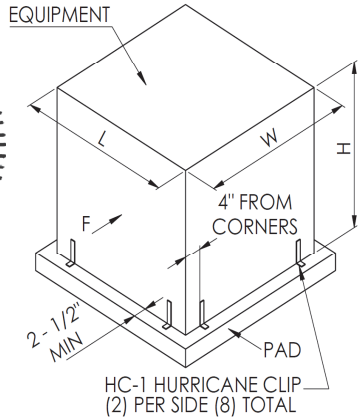

H-CLASS TO PAD MODEL#	PAD THICKNESS (in) = 4 WEIGHT	WIDTH	LENGTH
H1840-4	92	18	40
H2424-4	50	24	24
H2436-4	70	24	36
H3030-4	70	30	30
H3060-4	135	30	60
H3232-4	87	32	32
H3345-4	125	33	45
H3434-4	94	34	34
H3636-4	100	36	36
H3642-4	117	36	42
H3648-4	133	36	48
H3652-4	140	36	52
H3842-4	158	38	42
H3852-4	145	38	52
H3865-4	170	38	65
H4040-4	140	40	40
H4242-4	145	42	42
H4558-4	180	45	58
H5557-4	240	55	57
ZH4272*	234	42	72
ZH5890**	360	58	90

WIND LOAD CALCS:

Wind Speed V = ***150*** MPH
F = qz*G*Cf*Af (Eq. 29.5-2) = 49.07 *Af (lbs)
qz = 0.00256*Kz*Kzt*Kd*V^2 = 44.06 PSF
Exposure C ; Table 28.3-1 Kz = 0.85
Figure 26.8-1 Kzt = 1.00
Table 26.6-1 Kd = 0.90
Figure 29.5-1 Cf = 1.31
G = 0.85

DiversiTech Corporation
6650 Sugarloaf Parkway #100
Duluth, GA 30097 (800) 397-4823

RMB ENGINEERING LLC
Solving Problems to Minimize the Stress of Doing Business

SPECIAL PAD CONFIG.
* INDICATES TWO H3642-4 PADS USED IN A 42" x 72" SHAPE
** INDICATES TWO H4558-4 PADS USED IN A 58" x 90" SHAPE

ROW	UNIT / EQUIPMENT MAXIMUM DIMENSIONS INCHES			EQUIPMENT MINIMUM WEIGHT	HURRICANE H-CLASS PAD USED MODEL	WEIGHT	PAD WIDTH	PAD LENGTH	PAD THICK	150 MPH WIND LOAD	0.6(WIND MOMENT)	0.6(UNIT+ PAD) WEIGHT	RESISTING MOMENT	DESIGN CHECK		
51	*33.8*	*33.8*	*45*	*259*	H5557-4	*240*	*55*	*57*	*4.0*	*517*	*686*	*300*	*686*	*OK FOR*	*150*	*MPH*
52	35.0	35.0	29.0	105	H4558-4	180	45	58	4.0	346	320	171	321	OK FOR	150	MPH
53	35.0	35.0	29.0	160	H4242-4	145	42	42	4.0	346	320	183	321	OK FOR	150	MPH
54	35.0	35.0	29.0	181	H4040-4	140	40	40	4.0	346	320	192	321	OK FOR	150	MPH
55	35.0	35.0	32.4	167	H4558-4	180	45	58	4.0	386	390	208	391	OK FOR	150	MPH
56	35.0	35.0	32.4	251	H4040-4	140	40	40	4.0	386	390	234	391	OK FOR	150	MPH
57	35.0	35.0	32.4	168	H4558-4	180	45	58	4.0	387	390	209	391	OK FOR	150	MPH
58	35.0	35.0	32.4	251	H4040-4	140	40	40	4.0	387	390	235	391	OK FOR	150	MPH
59	35.0	35.0	35.8	101	H5557-4	240	55	57	4.0	428	468	205	469	OK FOR	150	MPH
60	35.0	35.0	35.8	237	H4558-4	180	45	58	4.0	428	468	250	469	OK FOR	150	MPH
61	35.0	35.0	35.8	329	H4040-4	140	40	40	4.0	428	468	281	469	OK FOR	150	MPH
62	35.0	35.0	39.2	412	H4040-4	140	40	40	4.0	468	552	331	552	OK FOR	150	MPH
63	35.0	35.0	39.2	162	H5557-4	240	55	57	4.0	468	552	241	552	OK FOR	150	MPH
64	35.0	35.0	39.2	311	H4558-4	180	45	58	4.0	468	552	295	552	OK FOR	150	MPH
65	35.0	35.0	42.4	225	H5557-4	240	55	57	4.0	507	639	279	639	OK FOR	150	MPH
66	35.0	35.0	42.4	388	H4558-4	180	45	58	4.0	507	639	341	639	OK FOR	150	MPH
67	35.0	35.0	42.5	228	H5557-4	240	55	57	4.0	508	642	281	643	OK FOR	150	MPH
68	35.0	35.0	42.5	391	H4558-4	180	45	58	4.0	508	642	343	643	OK FOR	150	MPH
69	35.0	35.0	44.5	269	H5557-4	240	55	57	4.0	532	699	305	700	OK FOR	150	MPH
70	35.0	35.0	44.5	442	H4558-4	180	45	58	4.0	532	699	373	700	OK FOR	150	MPH
71	35.0	35.0	45.9	298	H5557-4	240	55	57	4.0	548	739	323	740	OK FOR	150	MPH
72	35.0	35.0	45.9	478	H4558-4	180	45	58	4.0	548	739	395	740	OK FOR	150	MPH
73	35.0	35.0	46.0	479	H4558-4	180	45	58	4.0	549	741	396	742	OK FOR	150	MPH
74	35.0	35.0	46.0	300	H5557-4	240	55	57	4.0	549	741	324	742	OK FOR	150	MPH
75	35.0	35.0	46.0	561	H4242-4	145	42	42	4.0	549	741	424	742	OK FOR	150	MPH

LIMITS & REQUIREMENTS OF USE:

1) H-CLASS HURRICANE PAD - FOR ALL COUNTIES WITH A MAXIMUM WIND SPEED UP TO 150 M.P.H.
2) THE PAD AND THE SUPPORTED EQUIPMENT MUST BE LOCATED AT GROUND LEVEL. THIS TABLE DOES NOT APPLY TO ROOFTOP EQUIPMENT, EQUIPMENT LOCATED ON BALCONIES, OR ANY OTHER EQUIPMENT TO BE ELEVATED ABOVE GROUND LEVEL.
3) THE AREA UNDER CONCERETE SLAB ON GROUND SHALL HAVE ALL MATERIALS REMOVED PRIOR TO INSTALLATION ON COMPACTED SOIL AS VERIFIED BY OTHERS. MINIMUM SOIL COEFFICIENT OF FRICTION = 0.25
4) MAXIMUM DIMENSIONS AND WEIGHT OF UNIT / EQUIPMENT SHALL CONFORM TO SPECIFICATIONS STATED HEREIN. PAD WEIGHT TO BE VERIFIED BY OTHERS.
5) O.E.M. INSTALLATION INSTRUCTIONS (INCL. O.E.M. CLIPS) SUPERSEDE HURRICANE PAD INSTALLATION INSTRUCTIONS & USE OF HC-1 CLIPS, IF MORE STRINGENT.
6) ELECTRICAL GROUND, WHEN REQUIRED, TO BE DESIGNED & INSTALLED BY OTHERS. ALL MECHANICAL SPECIFICATIONS (CLEAR SPACE, TONNAGE, ETC.) SHALL BE AS PER MANUFACTURER RECOMMENDATIONS AND ARE THE EXPRESS RESPONSIBILITY OF THE CONTRACTOR.
7) THE ROLE OF THIS ENGINEER FOR THIS PROJECT IS THAT OF SPECIALTY ENGINEER AND NOT THE ENGINEER OF RECORD. CONSEQUENTLY, THE ARCHITECT/ENGINEER OF RECORD SHALL BE RESPONSIBLE FOR THE INTEGRITY OF ALL SUPPORTING SURFACES TO THIS DESIGN WHICH SHALL BE COORDINATED BY THE PERMITTING CONTRACTOR.
8) ENGINEER SEAL AFFIXED HERETO VALIDATES STRUCTURAL DESIGN AS SHOWN. USE OF THIS SPEC. BY CONTRACTOR, et. al. INDEMNIFIES & SAVES HARMLESS THIS ENGINEER FOR ALL COST & DAMAGES INCLUDING LEGAL FEES & APPELLATE FEES RESULTING FROM MATERIAL FABRICATION, SYSTEM ERECTION, CONSTRUCTION PRACTICES BEYOND THAT WHICH IS CALLED FOR BY LOCAL, STATE, & FEDERAL CODES & FROM DEVIATIONS OF THIS PLAN.
9) THIS ENGINEER SHALL NOT BE HELD RESPONSIBLE/LIABLE IN ANY WAY FOR ERRONEOUS OR INACCURATE DATA OR MEASUREMENTS. DIMENSIONS ARE SHOWN TO ILLUSTRATE DESIGN FORCES AND OTHER DESIGN CRITERIA. THEY MAY VARY SLIGHTLY, BUT MUST REMAIN WITHIN THE LIMITATIONS SPECIFIED HEREIN.
10) THIS DOCUMENT IS GENERIC AND DOES NOT PERTAIN TO ANY SPECIFIC PROJECT SITE.
11) PADS / UNITS INSTALLED DIRECTLY ON ANY COASTLINE REQUIRE A HEAVIER AND LARGER PAD TO ACCOUNT FOR EXPOSURE D ; Table 28.3-1; Kz = 1.03
12) ALL OTHER UNITS NOT SHOWN SHALL BE DESIGNED ON A CASE BY CASE BASIS.
13) ALTERATIONS OR ADDITIONS TO THIS DOCUMENT ARE NOT PERMITTED AND INVALIDATE THIS CERTIFICATION.
14) EXCEPT AS EXPRESSLY PROVIDED HEREIN, NO ADDITIONAL CERTIFICATIONS OR AFFIRMATIONS ARE INTENDED.
15) PADS ARE CONSTRUCTED WITH PRECAST CONCRETE, MINIMUM COMPRESSIVE STRENGTH, f'c=7,000 PSI AT 28 DAYS.
16) THIS ENGINEER SHALL BE GIVEN AN OPPORTUNITY TO RE-EVALUATE THIS WORK UPON DISCOVERY OF INACCURATE INFORMATION PRIOR TO MODIFICATION OF EXISTING FIELD CONDITIONS AND FABRICATION AND INSTALLATION OF MATERIALS.

ENGINEERING DATA:

1) ANALYSES PER 6th EDITION (2017) FLORIDA BUILDING CODE - SECTION 1620 HIGH VELOCITY HURRICANE ZONES.
2) WIND LOADS & LOAD COMBINATIONS PER ASCE 7-10 SECTION 2.4.1 (LOAD COMBINATIONS), SECTION 29.5 & FIGURE 29.5.1 FOR: WIND LOADS ON OTHER STRUCTURES.
3) EQUIP. TO BE ANCHORED TO PAD USING (8) DIVERSITECH HC-1 (OR O.E.M. CLIPS) CENTER ALL EQUIPMENT ON PADS. ATTACH CLIPS TO EQUIP (22 GAGE METAL MIN) WITH 1/4" BLUE / WHITE OR STAINLESS TAPCON CONCRETE ANCHORS WITH MINIMUM OF 1" EMBEDMENT. MINIMUM TAPCON SPECIFICATION: 700 LB PULLOUT / 900 LB SHEAR.
4) ALL EQUIPMENT REQUIRING TWO PADS ARE TO USE (12) TOTAL HC-1 CLIPS, FOUR (4) PER LENGTH AND TWO (2) PER WIDTH.
5) RISK CATEGORY = II TABLE 1604.5 - RISK CATEGORY OF BUILDINGS AND OTHER STRUCTURES, SECTION 301.15 OF THE MECHANICAL CODE, WIND RESISTANCE, AND 553.844 OF THE FLORIDA STATUTES STORM LOSS MITIGATION.

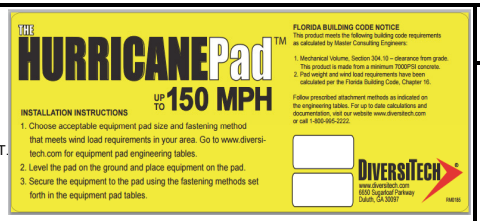

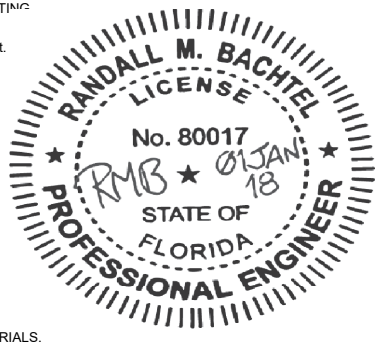

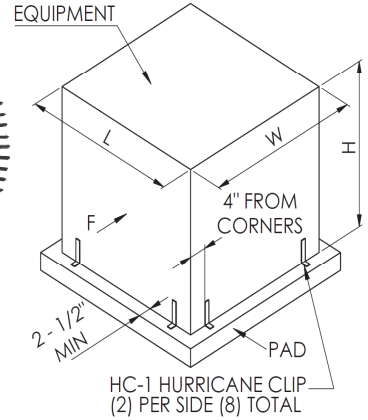

H-CLASS TO PAD MODEL#	PAD THICKNESS (in) = 4 WEIGHT	WIDTH	LENGTH
H1840-4	92	18	40
H2424-4	50	24	24
H2436-4	70	24	36
H3030-4	70	30	30
H3060-4	135	30	60
H3232-4	87	32	32
H3345-4	125	33	45
H3434-4	94	34	34
H3636-4	100	36	36
H3642-4	117	36	42
H3648-4	133	36	48
H3652-4	140	36	52
H3842-4	158	38	42
H3852-4	145	38	52
H3865-4	170	38	65
H4040-4	140	40	40
H4242-4	145	42	42
H4558-4	180	45	58
H5557-4	240	55	57
ZH4272*	234	42	72
ZH5890**	360	58	90

WIND LOAD CALCS:

Wind Speed V = ***150*** MPH
F = qz*G*Cf*Af (Eq. 29.5-2) = 49.07 *Af (lbs)
qz = 0.00256*Kz*Kzt*Kd*V^2 = 44.06 PSF
Exposure C ; Table 28.3-1 Kz = 0.85
Figure 26.8-1 Kzt = 1.00
Table 26.6-1 Kd = 0.90
Figure 29.5-1 Cf = 1.31
G = 0.85

DiversiTech Corporation
6650 Sugarloaf Parkway #100
Duluth, GA 30097 (800) 397-4823

RMB ENGINEERING LLC
Solving Problems to Minimize the Stress of Doing Business

SPECIAL PAD CONFIG.
* INDICATES TWO H3642-4 PADS USED IN A 42" x 72" SHAPE
** INDICATES TWO H4558-4 PADS USED IN A 58" x 90" SHAPE

ROW #	UNIT / EQUIPMENT MAXIMUM DIMENSIONS INCHES WIDTH	LENGTH	HEIGHT	EQUIPMENT MINIMUM WEIGHT LBS.	HURRICANE H-CLASS PAD USED MODEL NUMBER	WEIGHT LBS.	PAD WIDTH IN.	PAD LENGTH IN.	PAD THICK IN.	150 MPH WIND LOAD LBS.	0.6(WIND MOMENT) FT-LBS.	0.6(UNIT+ PAD) WEIGHT LBS.	RESISTING MOMENT FT-LBS.	DESIGN CHECK
76	35.0	49.0	22.2	70	H4558-4	180	45	58	4.0	372	281	150	282	OK FOR 150 MPH
77	35.0	49.0	30.2	250	H4558-4	180	45	58	4.0	506	483	258	484	OK FOR 150 MPH
78	35.0	49.0	34.2	200	H5557-4	240	55	57	4.0	572	605	264	605	OK FOR 150 MPH
79	35.0	49.0	34.2	358	H4558-4	180	45	58	4.0	572	605	323	605	OK FOR 150 MPH
80	35.0	63.0	38.2	296	ZH5890**	360	58	90	4.0	822	950	393	951	OK FOR 150 MPH
81	35.0	70.0	31.0	138	ZH5890**	360	58	90	4.0	740	721	299	722	OK FOR 150 MPH
82	35.0	70.0	35.0	260	ZH5890**	360	58	90	4.0	835	898	372	899	OK FOR 150 MPH
83	35.5	40.0	33.7	110	H5557-4	240	55	57	4.0	460	480	210	481	OK FOR 150 MPH
84	35.5	40.0	33.7	248	H4558-4	180	45	58	4.0	460	480	257	481	OK FOR 150 MPH
85	35.5	40.0	37.2	177	H5557-4	240	55	57	4.0	507	573	250	574	OK FOR 150 MPH
86	35.5	40.0	37.2	330	H4558-4	180	45	58	4.0	507	573	306	573	OK FOR 150 MPH
87	35.5	40.0	40.5	249	H5557-4	240	55	57	4.0	553	672	293	672	OK FOR 150 MPH
88	35.5	40.0	40.5	418	H4558-4	180	45	58	4.0	553	672	359	672	OK FOR 150 MPH
89	35.5	40.0	44.9	350	H5557-4	240	55	57	4.0	613	811	354	812	OK FOR 150 MPH
90	35.5	40.0	44.9	542	H4558-4	180	45	58	4.0	613	811	433	812	OK FOR 150 MPH
91	35.5	40.0	45.5	366	H5557-4	240	55	57	4.0	622	832	363	833	OK FOR 150 MPH
92	35.5	40.0	45.5	560	H4558-4	180	45	58	4.0	622	832	444	833	OK FOR 150 MPH
93	35.5	40.0	46.0	378	H5557-4	240	55	57	4.0	628	849	371	850	OK FOR 150 MPH
94	35.5	40.0	46.0	575	H4558-4	180	45	58	4.0	628	849	453	850	OK FOR 150 MPH
95	35.5	40.0	47.4	412	H5557-4	240	55	57	4.0	647	895	391	896	OK FOR 150 MPH
96	35.5	40.0	47.4	616	H4558-4	180	45	58	4.0	647	895	478	896	OK FOR 150 MPH
97	38.0	40.0	45.0	353	H5557-4	240	55	57	4.0	615	815	356	816	OK FOR 150 MPH
98	38.0	40.0	45.0	545	H4558-4	180	45	58	4.0	615	815	435	816	OK FOR 150 MPH
99	38.0	40.0	47.4	411	H5557-4	240	55	57	4.0	646	895	391	895	OK FOR 150 MPH
100	38.0	40.0	47.4	616	H4558-4	180	45	58	4.0	646	895	477	895	OK FOR 150 MPH