4" Entry Panel, 8 Port, 2 x 4

Part #	Description
E576	4" Entry Panel, 8 Port, 2x4

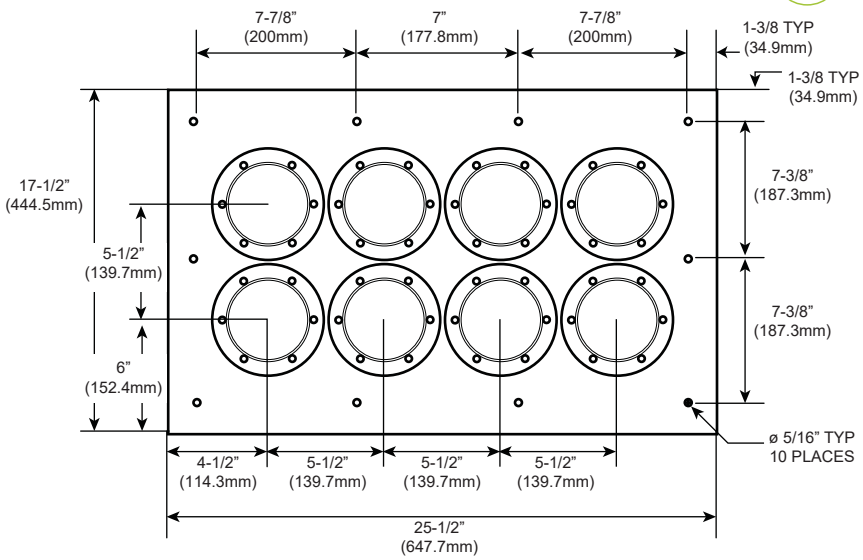

General Specification

Quantity	1 Panel
Color	Gray
Number of Ports	8
Cap Included	Yes

Dimensions

Height	17.5"
Width	25.5"
Entry Port Size	4"
Wall Opening Height	9.5"
Wall Opening Width	20.5"

Mechanical

Water/Dust Resistance	*IP66

*When used with proper entry boot and cushion

Material

Material Type	T6 Aluminum

3rd Party Compliance

ROHS	Compliant

© 2020 MIROC Imports LLC All Rights Reserved
All specifications are subject to change without notice