For Residential and Light Commercial Applications

Job Name _____ Contractor _____

Job Location _____ Approval _____

Engineer _____ Contractor's P.O. No. _____

Approval _____ Representative _____

PURE WATER

Plastic Filter Housings

Top Quality and Economical Plastic Filter Housings

Single Cartridge Filter Housings

Sizes: ¼" – 1½" (6 – 40mm)

Our poly filter housings are manufactured from the highest quality, FDA grade, 100% polypropylene and acrylic styrene (for clear housings). Leak-proof sealing is accomplished by compression against a top seated EPDM O-ring located in the housing's sump. Thick wall and added ribs make the housings ideal for a wide range of applications. Polypropylene construction provides excellent chemical resistance in most installations environments. Housings supplied with and without pressure relief valves. See specifications table for pressure and temperature ratings.

Full product line

We offer a complete line of poly filter housings for virtually every application where single cartridge housings are typically used. Select from standard, heavy-duty, full-flow, high-purity, high-temp and valve-in-head models.

Features

- Full product line for more types, models, pipe fittings and options
- Heavy-duty construction, made using high-quality FDA grade polypropylene
- Superior chemical resistance from many aggressive chemicals
- Buttress thread design for superior security
- Thick side walls with heavy-duty ribs to provide greater strength
- Temperature rated to 125°F (52°C)
- Cap, sump and top-seated O-rings compress to provide leak proof sealing

See specifications table for more details.

Buttress thread design — Provides greater security

Heavy-duty construction — Housings are made entirely of the highest quality FDA grade polypropylene

Note: Do not use with water that is microbiologically unsafe or of unknown quality without adequate disinfection before or after the system.

Watts product specifications in U.S. customary units and metric are approximate and are provided for reference only. For precise measurements, please contact Watts Technical Service. Watts reserves the right to change or modify product design, construction, specifications, or materials without prior notice and without incurring any obligation to make such changes and modifications on Watts products previously or subsequently sold.

WATTS®

Dimensions

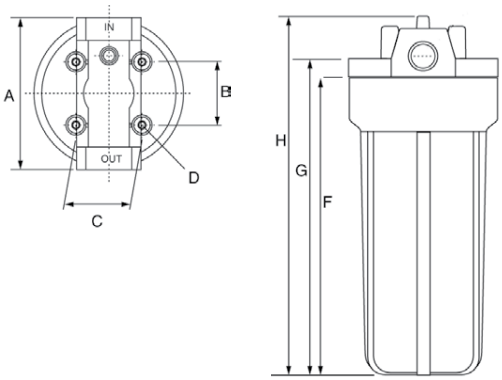

HOUSING TYPE	SIZE	DIMENSIONS													
		A		B		C		D		F		G		H	
	in.	*in.*	*mm*	*in.*	*mm*	*in.*	*mm*	*in.*	*mm*	*in.*	*mm*	*in.*	*mm*	*in.*	*mm*
Blue/Black/Clear	10	4.72	120	1.57	40	1.18	30	1.18	30	10.5	267	11.0	279	11.8	300
Blue/Black/Clear	20	4.72	120	1.57	40	1.18	30	1.18	30	20.47	520	21.26	540	22.8	579
High Temp	10	5.35	136	2.22	56	2.28	58	0.23	6	10.43	265	11.49	292	12.5	318
High Temp	20	5.35	136	2.22	56	2.28	58	0.23	6	20.47	520	21.26	540	22.8	579
Big Blue (B-B)	10	7.28	186	3.03	77	3.03	77	0.275	7	11.33	288	11.57	294	14.0	356
Big Blue (B-B)	20	7.28	186	3.03	77	3.03	77	0.275	7	21.25	540	21.65	550	24.0	25

Big Blue (B-B) Series (10" and 20")

High Temp (10" and 20")

Blue/Black (10" and 20")

Clear (10" and 20")

Specifications

Material: sumps & caps	FDA grade polypropylene.
Material: O-rings	EPDM is standard; Viton is available as a spare part.
Maximum temperature (standard)	125°F (52°C)
Maximum temperature (high temp)	200°F (93°C)
Minimum temperature	40°F (4°C)
Maximum pressure (standard)	125psi (8.75 bar)
Maximum pressure (full flow)	90psi (6.3 bar)

PWHIB10BB

Individually Boxed Plastic Housings in Master Cartons

MODEL NO.	HOUSING	TYPE	SUMP	CAP	WRENCH	BRACKET	CASE QTY.
PWHIB34VIH	N/A	Valve-In-Head	Clear	White	PWWRSTDHSG	PWMBVIH	6
PWHIB10BB	PWHP10BB1BPR	Big Blue (BB)	Blue	Black	PWWRBBHSG	PWMBBB1	4
PWHIB20BB	PWHP20BB1BPR	Big Blue (BB)	Blue	Black	PWWRBBHSG	PWMBBB1	4

*Complete with housing, wrench, bracket and mounting screws

Poly Filter Housing

MODEL NO.	SIZE	PIPE	SUMP	CAP	# CASE
Clear Housings					
PWHP1014C	10"	¼"	Clear	White	12
PWHP1014CPR	10"	¼"	Clear	White PR	12
PWHP1012C	10"	½"	Clear	White	12
PWHP1012CPR	10"	½"	Clear	White PR	12
PWHP1034C	10"	¾"	Clear	White	12
PWHP1034CPR	10"	¾"	Clear	White PR	12
PWHP10BB1CPR	10"	1"	Clear	Black PR	4
PWHP20BB1CPR	20"	1"	Clear	Black PR	6
10" Residential Housings					
PWHP1014B	10"	¼"	Blue	Black	12
PWHP1014BPR	10"	¼"	Blue	Black PR	12
PWHP1012B	10"	½"	Blue	Black	12
PWHP1012BPR	10"	½"	Blue	Black PR	12
PWHP1034B	10"	¾"	Blue	Black	12
PWHP1034BPR	10"	¾"	Blue	Black PR	12
20" Residential Housings					
PWHP2012B	20"	½"	Blue	Black	6
PWHP2012BPR	20"	½"	Blue	Black PR	6
10" Big Blue Housings (for 4½" OD cartridges)					
PWHP10BB34BPR	10"	¾"	Blue	Black PR	4
PWHP10BB1B	10"	1"	Blue	Black	4
PWHP10BB1BPR	10"	1"	Blue	Black PR	4
PWHP10BB15B	10"	1½"	Blue	Black	4
PWHP10BB15BPR	10"	1½"	Blue	Black PR	4
20" Big Blue Housings (for 4½" OD cartridges)					
PWHP20BB34BPR	20"	¾"	Blue	Black PR	4
PWHP20BB1B	20"	1"	Blue	Black	4
PWHP20BB1BPR	20"	1"	Blue	Black PR	4
PWHP20BB15CP	20"	1½"	Blue	Black	4
PWHP20BB15CPR	20"	1½"	Blue	Black PR	4
High Temp Housings (200°F / 93°C)					
PWHPHT1034	10"	¾"	Red	Red	12
PWHPHT2034	20"	¾"	Red	Red	12
Mounting Brackets - includes housing mounting screws					
PWMBVIH	Brkt, VIH Housing				1
PWMBSTD1	Single, 10" & 20" Residential Housings				1
PWMBSTD2	Double, 10" & 20" Residential Housings				1
PWMBSTD3	Triple, 10" & 20" Residential Housings				1
PWMBBB1	Single, 10" & 20" Big Blue Housing				1
PWMBBB2	Double, 10" & 20" Big Blue Housing				1
PWMBBB3	Triple, 10" & 20" Big Blue Housing				1
Wrenches					
PWWRSTDHSG	Wrench for Residential Housings				1
PWWRBBHSG	Wrench for Big Blue Housing				1
PWWRDUAL	Dual Wrench for Membrane and Residential Filter Housings				1
Mounting Screws					
PWMS-STDHSG	Mounting Screws for standard Housings				1
PWMS-BBHSG	Mounting Screws for Big Blue Housings				1
O-Rings					
PWORSTDHSG	O-Ring for standard housings				1
PWORBBHSG	O-Ring for Big Blue housings				1
PWORHTHSG	O-Ring for high temp housings				1

A Watts Water Technologies Company

USA: Tel. (800) 224-1299 • www.watts.com
Canada: Tel. (888) 208-8927 • www.watts.ca

© 2012 Watts