DuraPort® Industrial Outlet Kit

APPLICATION

DuraPort industrial products provide IP67-class protection to safeguard your connectivity from humidity/moisture, corrosive materials, temperature extremes, and other conditions often found in the industrial environment.

SPECIFICATION

Single-gang and dual-gang industrial outlet kits shall fit standard NEMA boxes. The single-gang outlet kit shall provide 1 or 2 ports and an equivalent amount of connector housings and dust caps assembled. The dual-gang outlet kit shall provide 2 or 4 ports and an equivalent amount of connector housings and connector caps assembled. Connector housing shall accept all standard Leviton QuickPort® modules. Connectors and related components shall be IP67 rated. Wallplate shall be constructed of stainless steel, with an integral over-molded gasket. Connector housing shall be made of PBT, be cULus listed, and compliant with ANSI/TIA-1005.

COUNTRY OF ORIGIN

Mexico

WARRANTY INFORMATION

For a copy of Leviton product warranties, visit www.leviton.com/warranty.

FEATURES

- IP67-rated environmental sealing (dust/water protection)
- Industrial Outlet Kit includes pre-assembled stainless-steel wallplate, and equivalent number of connector caps and housings for quick and easy ordering
- Over-molded wallplate gasket ensures watertight fit
- Wallplate mounting holes have embedded sealing feature which provides the dual benefit of sealing, and helping to ensure proper orientation during installation of wallplate
- Withstands chemical wash down requirements for disinfection and sterilization in health care facilities, as established by the CDC
- Available in single-gang configurations of 1 or 2 ports and dual-gang configurations of 2 or 4 ports
- Twist-lock design for faster installation and changes
- Encapsulated RJ-45 design protects integral components
- Patented design

DESIGN CONSIDERATIONS

- Uses standard Leviton QuickPort opening to easily replace, or upgrade performance without replacing entire outlet
- Compatible with standard NEMA boxes
- DuraPort Industrial Patch Cords, and QuickPort connectors sold separately

STANDARDS COMPLIANCE

cULus Listed; complies with ANSI/TIA-1005 and ANSI/TIA-568.
cULus Listed (UL 1863, CAN/CSA-C22.2 No. 182.4-1990).

PHYSICAL SPECIFICATIONS

Ingress Protection:	IP67 (dust/water)
Corrosion:	Resistant to most common chemicals, oils, and cleaning agents
Temperature:	-40°C to 65°C (-40°F to 149°F)
Vibration:	
Frequency Range	10-500Hz
Acceleration	5g (operational)
Mating Cycles:	750 minimum
Materials:	
Connector Housing	Polybutylene terephthalate (PBT)
Wallplate Type	302 Stainless Steel
Mounting Screws	Type 18-8 Stainless Steel
Wallplate Gasket	Thermoplastic Elastomer

Leviton Network Solutions
2222 - 222nd St. SE
Bothell, WA 98021-4416

tel 1-800-824-3005
tel +1-425-486-2222
appeng@leviton.com
www.leviton.com

Asia / Pacific
T +1.631.812.6228
E infoasean@leviton.com

Canada
T +1.514.954.1840
E pcservice@leviton.com

Caribbean
T +1.954.593.1896
E infocaribbean@leviton.com

China
T +852.2774.9876
E infochina@leviton.com

Colombia
T +57.1.743.6045
E infocolombia@leviton.com

Europe
T +44.0.1592.772124
E customerservice@brand-rex.com

India / SAARC
T +971.4.886.4722
E infoindia@leviton.com

Mexico
T +52.55.5082.1040
E lsamarketing@leviton.com

Middle East & Africa
T +971.4.886.4722
E lmeinfo@leviton.com

South Korea
T +82.2.3273.9963
E infokorea@leviton.com

Copyright © 2016 Leviton Manufacturing Co., Inc. All rights reserved. Subject to change without notice.

Revised December 2016

ELECTRONIC FILES

For CAD files, typical specs, or technical drawings (.DXF, .DWG), visit www.leviton.com.

The DuraPort® System

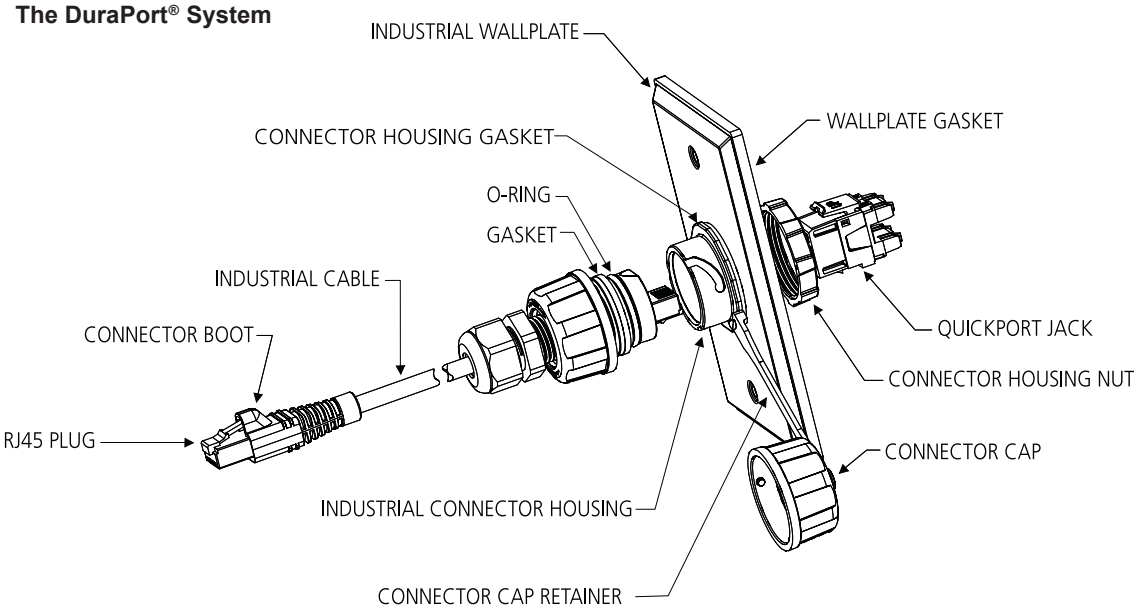

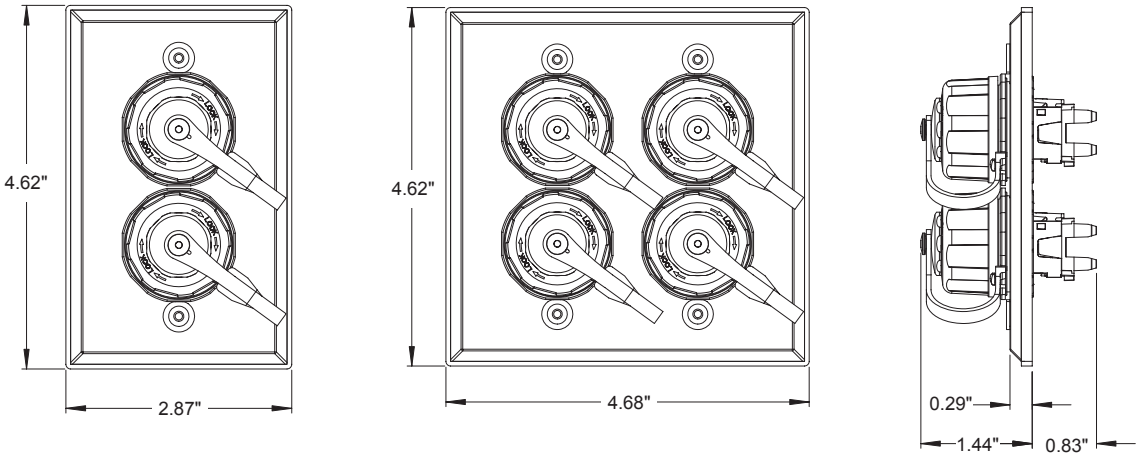

DURAPORT INDUSTRIAL OUTLET KIT

Description	Part No.
DuraPort Industrial Outlet Kit, Single-Gang, 1 port	D670K-1S1
DuraPort Industrial Outlet Kit, Single-Gang, 2 ports	D670K-1S2
DuraPort Industrial Outlet Kit, Dual-Gang, 2 ports	D670K-2S2
DuraPort Industrial Outlet Kit, Dual-Gang, 4 ports	D670K-2S4

L16 6529

ISO 9001 REGISTERED Quality Manufacturer

Leviton Network Solutions
2222 - 222nd St. SE
Bothell, WA 98021-4416

tel 1-800-824-3005
tel +1-425-486-2222
appeng@leviton.com
www.leviton.com

Asia / Pacific
T +1.631.812.6228
E infoasean@leviton.com

Canada
T +1.514.954.1840
E pcservice@leviton.com

Caribbean
T +1.954.593.1896
E infocaribbean@leviton.com

China
T +852.2774.9876
E infochina@leviton.com

Colombia
T +57.1.743.6045
E infocolombia@leviton.com

Europe
T +44.0.1592.772124
E customerservice@brand-rex.com

India / SAARC
T +971.4.886.4722
E infoindia@leviton.com

Mexico
T +52.55.5082.1040
E lsamarketing@leviton.com

Middle East & Africa
T +971.4.886.4722
E lmeinfo@leviton.com

South Korea
T +82.2.3273.9963
E infokorea@leviton.com

Copyright © 2016 Leviton Manufacturing Co., Inc. All rights reserved. Subject to change without notice.

Revised December 2016