ALLIED™ Commercial

PACKAGED GAS/ELECTRIC

KGB

K-Series™ Rooftop Units
Standard and High Efficiency - 60 HZ

Bulletin No. KGB-024-090 08/2019)

PRODUCT SPECIFICATIONS

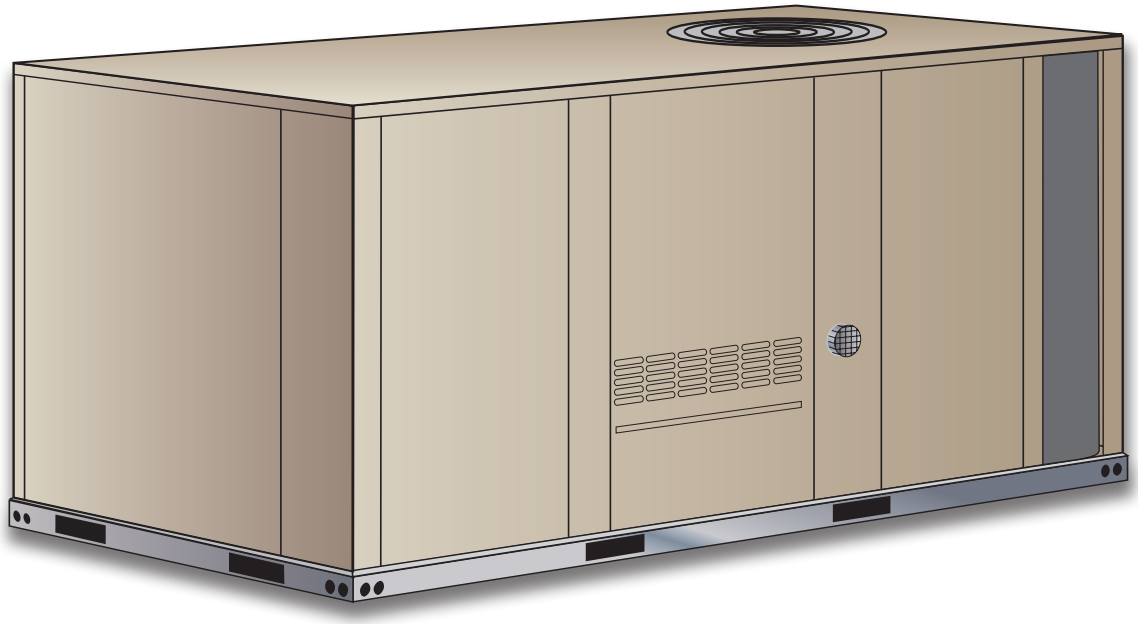

ASHRAE 90.1
COMPLIANT

2 to 7.5 Tons

Net Cooling Capacity – 24,200 to 88,000 Btuh
Gas Input Heat Capacity – 65,000 to 150,000 Btuh

MODEL NUMBER IDENTIFICATION

K G B 060 S 4 B S 1 Y

Brand/Family
K = K-Series™ Product Line

Unit Type
G = Packaged Gas Heat w/ Electric Cooling

Major Design Sequence
B = 2nd Generation

Nominal Cooling Capacity - Tons
024 = 2 Tons
030 = 2.5 Tons
036 = 3 Tons
048 = 4 Tons
060 = 5 Tons
072 = 6 Tons
074 = 6 Tons
090 = 7.5 Tons

Cooling Efficiency
H = High Efficiency
S = Standard Efficiency

Refrigerant Type
4 = R-410A

Blower Type
D = Direct Drive (PSC)
E = Direct Drive (ECM)
B = Belt Drive
T = Belt Drive (2 Speed)

Heating Type
S = Standard Gas Heat, 1 stage
M = Medium Gas Heat, 1 stage
U = Medium Gas Heat, 2 Stage
T = High Gas Heat, 1 Stage
H = High Gas Heat, 2 Stage
W = Standard Gas Heat, 1 Stage, Low NOx
B = Standard Gas Heat, 2 Stage Low NOx
Y = Medium Gas Heat, 1 Stage, Low NOx
Q = Medium Gas Heat, 2 Stage, Low NOx
Z = High Gas Heat, 1 Stage, Low NOx
X = High Gas Heat, 2 Stage, Low NOx

Minor Design Sequence
1 = 1st Revision
2 = 2nd Revision
3 = 3rd Revision

Voltage
P = 208/230V−1 phase-60hz
Y = 208/230V-3 phase-60hz
G = 460V-3 phase-60hz
J = 575V-3 phase-60hz

FEATURE HIGHLIGHTS

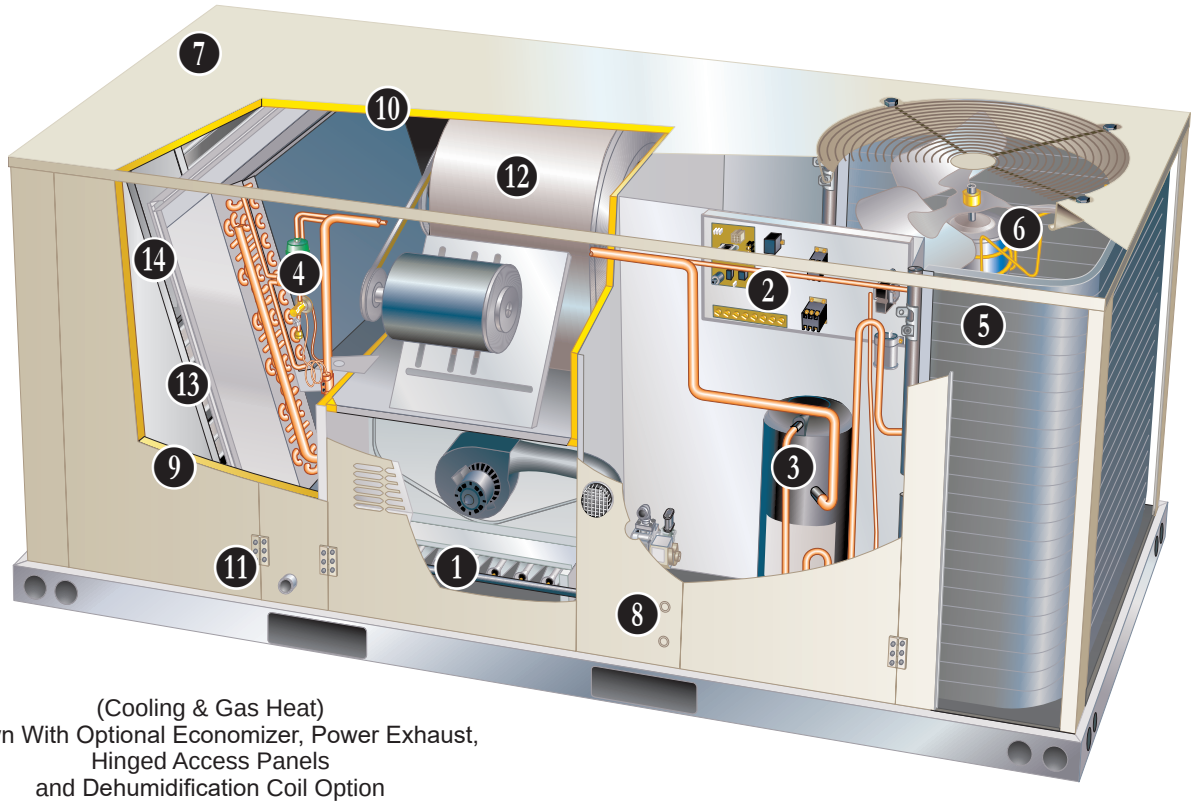

(Cooling & Gas Heat)
Shown With Optional Economizer, Power Exhaust,
Hinged Access Panels
and Dehumidification Coil Option

K-Series™ rooftop units from Allied are the new standard for reliable, efficient rooftop units built for long-lasting performance that can significantly improve indoor environments. K-Series™ rooftop units feature:

- **R-410A Refrigerant -** Environmentally friendly.
- **Single Speed Scroll Compressor -** Furnished on 024 through 072 models.
- **Two-Stage Scroll Compressor -** Furnished on 074 through 090 models. Allows rooftop units to deliver just the necessary amount of cooling needed to meet the space's demand.
- **Eco-Last™ Coil System -** Smaller, lighter condenser coil with improved heat transfer.
- **High Pressure Switches -** Protect compressor.
- **Isolated Compressor Compartment -** Allows performance check during normal compressor operation without disrupting airflow.
- **Direct Drive ECM, Direct Drive PSC or Belt Drive Blower Motors -** Direct drive ECM motor (024, 030, 036, 048 and 060 1ph models); direct drive PSC motor (036, 048 and 060 3ph models), belt drive motor (036, 048, 060, 072, 074, and 090 models); two-speed belt drive motor (low static/high static) 074 and 090 models to maximize air performance.
- **Independent Motor Mounts -** Allows for easy and efficient service access without removing the top panel.
- **Downflow or Horizontal Airflow -** Easy field conversion.
- **Two Fork Lift Slots on Three Sides -** Easy to pick up and transport units from almost any angle.
- **Corrosion-Resistant Removable, Reversible Drain Pan -** Provides application flexibility, durability and improved serviceability.
- **Thermostatic Expansion Valves -** Provide peak cooling performance across the entire application range.
- **Dehumidification System Option -** Patented system allows for independent control of temperature and humidity, providing enhanced comfort control.
- **Common Components -** Many maintenance items are standard throughout the entire product line, reducing the need to carry different parts to the job or maintain in inventory.

CONTENTS

Blower Data 28
Dimensions - Accessories. 56
Dimensions - Unit 55
Electrical Data. 45
Features And Benefits 3
High Altitude Derate. 21
Humiditrol® Dehumidification System Ratings 26
Model Number Identification 1
Optional Conventional Temperature Control Systems 53
Options / Accessories 10
Outdoor Sound Data 44
Ratings 22
Specifications 14
Specifications - Low NOx Gas Heat 21
Specifications - Standard Gas Heat. 21
Unit Clearances 52
Weight Data. 54

APPROVALS

AHRI Certified to AHRI Standard 210/240 (2 thru 5 ton models) and AHRI Standard 340/360 (6 ton models).

ETL and CSA listed.

Units are Certified by CSA.

Components bonded for grounding to meet safety standards for servicing required by UL, ULC and National and Canadian Electrical Codes.

All models are ASHRAE 90.1 compliant.

ISO 9001 Registered Manufacturing Quality System.

Models equipped with low NOx gas heat meet the California Nitrogen Oxides (NOx) Standards that apply in the South Coast Air Quality Management District and the San Francisco Bay Area Air Quality Management District.

California Only

If installed in South Coast Air Quality Management District (SCAQMD) only:

This gas unit does not meet the SCAQMD Rule 1111 NOx emission limit (14 ng/J), and thus is subject to a mitigation fee of up to $450. This furnace is not eligible for the Clean Air Furnace Rebate Program: www.CleanAirFurnaceRebate.com.

If installed in San Joaquin Valley Air Pollution Control District (SJVAPCD) only:

This gas unit does not meet the SJVAPCD Rule 4905 NOx emission limit (14 ng/J), and thus is subject to a mitigation fee of up to $450.

WARRANTY

Limited ten years aluminized heat exchanger, limited fifteen years optional stainless steel heat exchanger.
Limited five years on compressors.

Limited three years on the Eco-Last™ Coil System.

Limited five years Optional High Performance Economizers.

Limited one year all other covered components.

HEATING SYSTEM

1 Aluminized steel inshot burners, direct spark ignition, electronic flame sensor, combustion air inducer, redundant automatic single or dual stage gas valve with manual shut-off.

Heat Exchanger

Tubular construction, aluminized steel, life cycle tested.

Stainless Steel Heat Exchanger is required if mixed air temperature is below 45°F.

2 **Electronic Pilot Ignition**

Electronic spark igniter provides positive direct ignition of burners on each operating cycle. The system permits main gas valve to stay open only when the burners are proven to be lit. Should a loss of flame occur, the gas valve closes, shutting off the gas to the burners. Ignition module has LED to indicate status and aid in troubleshooting.

Watchguard circuit on module automatically resets ignition controls after one hour of continuous thermostat demand after unit lockout, eliminating nuisance service calls. Ignition control is factory installed in the controls section.

Limit Controls

Factory installed, redundant limit controls with fixed temperature setting.

Heat limit controls protect heat exchanger and other components from overheating.

Safety Switches

Flame roll-out switch, flame sensor and combustion air inducer proving switch protect system operation.

Low NOx Models

All single phase models are available in low NOx versions (40 ng/J).

HEATING SYSTEM (continued)

Required Selections

Gas Input Choice - Order one:

- Standard Gas Heat (1 Stage) 65,000 Btuh
- Standard Gas Heat (2 Stage) 70,000/53,000 Btuh
- Medium Gas Heat (1 Stage) 108,000 Btuh
- Medium Gas Heat (2 Stage) 81,000/108,000 Btuh
- High Gas Heat (1 Stage) 150,000 Btuh
- High Gas Heat (2 Stage) 113,000/150,000 Btuh

Required Selections (continued)

Standard or Low NOx
Specify standard gas heat or Low NOx (40 ng/J) option (three phase models only).

NOTE - All single phase models are Low NOx (40 ng/J) equipped.

NOTE - Standard Gas Heat (2 Stage) is only available with Low NOx models.

Options/Accessories

Factory Installed

Stainless Steel Heat Exchanger
Required if mixed air temperature is below 45°F.

Field Installed

Combustion Air Intake Extensions
Recommended for use with existing flue extension kits in areas where high snow areas can block intake air.

Low Temperature Vestibule Heater
Electric heater automatically controls minimum temperature in gas burner compartment when temperature is below -40°F. C.S.A. certified to allow operation of unit down to -60°F.

LPG/Propane Kits
Conversion kit to field change over units from Natural Gas to LPG/ Propane.

Vertical Vent Extension Kit
Use to exhaust flue gases vertically above unit. Required when unit vent is too close to fresh air intakes per building codes. The vent kit also prevents ice formation on intake louvers.

COOLING SYSTEM

Designed to maximize sensible and latent cooling performance at design conditions.

System can operate from 30°F to 125°F without any additional controls.

R-410A Refrigerant
Non-chlorine, ozone friendly, R-410A.

Unit is factory pre-charged with refrigerant. See Specifications Tables.

3 Single Speed Scroll Compressor (024 through 072 Models)
Scroll compressors for high performance, reliability and quiet operation.

Resiliently mounted on rubber grommets for quiet operation.

Two-Stage Scroll Compressor (074 and 090 Models)
Two-stage scroll compressors for increased part load efficiency, high performance, reliability and quiet operation.

Resiliently mounted on rubber grommets for quiet operation.

Compressor Crankcase Heater
Protects against refrigerant migration that can occur during low ambient operation.

4 Thermal Expansion Valve
Assures optimal performance throughout the application range. Removable element head.

Filter/Drier
High capacity filter/drier protects the system from dirt and moisture.

High Pressure Switch
Protects the compressor from overload conditions such as dirty condenser coils, blocked refrigerant flow, or loss of outdoor fan operation.

Freezestat
Protects the evaporator coil from damaging ice build-up due to conditions such as low/no air flow, or low refrigerant charge.

5 Eco-Last™ Coil System (All Models)

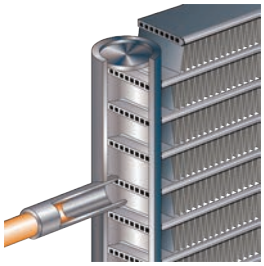

Condenser coil features lightweight, all aluminum brazed fin construction.

Constructed of three components: a flat extrusion tube, fins in-between the flat extrusion tubes and two refrigerant manifolds.

Eco-Last™ Coil System Features:

- Improved heat transfer performance due to high primary surface area (flat tubes) versus secondary surface (fins).
- Smaller internal volume (reduced refrigerant charge).
- High durability (all aluminum construction).
- Fewer brazed joints.
- Compact design (reduces unit weight).
- Easy maintenance/cleaning.

Mounting brackets with rubber inserts secure coil to unit providing vibration dampening and corrosion protection.

COOLING SYSTEM (continued)

Conventional Fin/Tube Coil and Evaporator Coil (all models)
Copper tube construction, enhanced rippled-edge aluminum fins, flared shoulder tubing connections, silver soldered construction for improved heat transfer. Factory leak tested

Evaporator coil cross row circuiting with rifled tubing optimizes both sensible and latent cooling capacity.

Condensate Drain Pan
Plastic pan, sloped to meet drainage requirements of ASHRAE 62.1.

Side or bottom drain connections. Reversible to allow connection at back of unit.

6 Outdoor Coil Fan Motor
Thermal overload protected, totally enclosed, permanently lubricated sleeve (024, 030, 036 and 048 models) or ball bearings (060, 072, 074, and 090 models), shaft up, wire basket mount.

Outdoor Coil Fan
PVC coated fan guard furnished.

Required Selections

Cooling Capacity
Specify nominal cooling capacity of the unit.

Options/Accessories

Factory Installed

Conventional Fin/Tube Condenser Coil (replaces Eco-Last™ Coil System) (All Models except 072 and 074H)
Copper tube construction, enhanced rippled-edge aluminum fins, flared shoulder tubing connections, silver soldered construction.

Field Installed

Condensate Drain Trap
Field installed only.

Available in copper or PVC.

Drain Pan Overflow Switch
Monitors condensate level in drain pan, shuts down unit if drain becomes clogged.

Low Ambient Kit
Cycles the outdoor fan while allowing compressor operation in the cooling cycle. This intermittent fan operation allows the system to operate without icing the evaporator coil and losing capacity. Designed for use in ambient temperatures no lower than 0°F. A crankcase heater must be installed on the compressor.

CABINET

7 Construction
Heavy-gauge steel panels and full perimeter heavy-gauge galvanized steel base rail provides structural integrity for transportation, handling, and installation.
Base rails have rigging holes. Three sides of the base rail have fork slots.

Raised edges around duct and power entry openings in the bottom of the unit provide additional protection against water entering the building.

Airflow Choice
Units are shipped in downflow (vertical) configuration, can be field converted to horizontal air flow configuration without the need of a kit.

8 Power/Gas Entry
Electrical and gas lines can be brought through the unit base or through horizontal access knock-outs.

Optional Bottom Gas Entry Kit is available.

9 Exterior Panels
Constructed of heavy-gauge, galvanized steel with a two-layer enamel paint finish.

10 Insulation
All panels adjacent to conditioned air are fully insulated with non-hygroscopic fiberglass insulation.

Unit base is fully insulated. The insulation also serves as an air seal to the roof curb, eliminating the need to add a seal during installation.

Access Panels
Access panels are provided for the economizer/filter section, heating/blower section, and the compressor/controls section.

NOTE - KGB060/074/090 models include a filler panel for proper cabinet fit for optional accessories (Economizers, Power Exhaust, Outdoor Air Dampers and Barometric Relief Dampers).

Options/Accessories

Factory Installed

Corrosion Protection
A completely flexible immersed coating with an electro-deposited dry film process (AST ElectroFin E-Coat). Meets Mil Spec MIL-P-53084, ASTM B117 Standard Method Salt Spray Testing.

Indoor Corrosion Protection:
- Coated coil
- Coated reheat coil
- Painted blower housing
- Painted base

Outdoor Corrosion Protection:
- Coated coil
- Painted base

11 Hinged Access Panels
Large access panels are hinged and have quarter-turn latches for quick and easy access to maintenance areas (economizer / filter, compressor / controls, heating / blower).

Field Installed

Combination Coil/Hail Guards
Heavy gauge steel frame painted to match cabinet with expanded metal mesh to protect the outdoor coil from damage.

Bottom Gas Entry Kit
Field installed piping kit to facilitate bottom gas entry.

CONTROLS

Unit Control
All control voltage is provided via a 24V (secondary) transformer with built-in circuit breaker protection.

Heat/Cool Staging - Capable of up to 2 heat / 2 cool staging with a third party DDC control system or thermostat.

Low Voltage Terminal Block - Provides screw terminal connections for thermostat or controller wiring.

Night Setback Mode - Saves energy by closing outdoor air dampers and operating supply fan on thermostat demand only.

Options / Accessories

Field Installed

Smoke Detector
Photoelectric type, installed in supply air section, return air section or both sections. Available with power board and single sensor (supply or return) or power board and two sensors (supply and return). Power board located in unit control compartment.

Thermostats
Control system and thermostat options.

Aftermarket unit controller options.

See page 53.

12 BLOWER

A wide selection of supply air blower options are available to meet a variety of air flow requirements.

Overload protected, equipped with ball bearings (ECM and belt drive) or sleeve bearings (PSC direct drive).

ECM Motor
Multi-tap ECM direct drive motors are offered on 024, 030, 036, 048 and 060 (208/230V-1ph) models.

Motor has nine speed taps to allow adjustment to meet cooling, heating, and ventilation needs at specified external static pressures.

PSC Motor
Direct drive PSC motors are offered on 036, 048, 060 (208/230V-3ph) models.

Belt Drive Motor
Single speed belt drive motors are offered on 036, 048, 060, 072, 074 and 090 models and are available in several different sizes to maximize air performance.

Two-speed belt drive motor (low static/high static) is available on 074 and 090 models.

Supply Air Blower
Forward curved blades, blower wheel is statically and dynamically balanced.

All belt drive motors have adjustable pulley for speed change.

Required Selections

Supply Air Blower
Specify direct drive ECM or belt drive motor.

For belt drive models, specify drive kit number when base unit is ordered. See Drive Kit Specifications table.

INDOOR AIR QUALITY

Air Filters
Disposable 2 inch filters furnished as standard.

Options/Accessories

Field Installed

High Performance Air Filters
Disposable MERV 8 or MERV 13 (Minimum Efficiency Reporting Value based on ASHRAE 52.2) efficiency 2 inch pleated filters.

ELECTRICAL

Marked & Color-Coded Wiring
All electrical wiring is color-coded and marked to identify which components it is connecting.

Electrical Plugs
Positive connection electrical plugs are used to connect common accessories or maintenance parts for easy removal or installation.

Required Selections

Voltage Choice
Specify when ordering base unit.

Options/Accessories

Factory or Field Installed

Disconnect Switch (80 Amp)
Accessible from outside of unit, spring loaded weatherproof cover furnished. Main power to the unit is field connected to the disconnect which allows all power to be shut off for service. See Electrical Data tables for ordering information, page 45.

GFI Service Outlets (2)
115V ground fault circuit interrupter (GFCI) type, non-powered, field-wired.

Field Installed

GFI Weatherproof Cover
Single-gang cover.

Heavy-duty UV-resistant polycarbonate case construction.

Hinged base cover with gasket.

ECONOMIZER OPTIONS

Factory or Field Installed

13 Economizer (Standard and High Performance Common Features)

Combination Outdoor Air Hood is furnished.

Factory installed Economizer can be ordered with two exhaust options:

- Barometric Relief Dampers and Exhaust Hood.
- No Exhaust.

Field installed Economizer includes Barometric Relief Dampers with Combination Hood.

Barometric Relief Dampers allow relief of excess air, aluminum blade dampers prevent blow back and outdoor air infiltration during off cycle, bird screen furnished.

NOTE - Barometric Relief Dampers are required when Economizer is factory installed with field installed Power Exhaust Fan option. See Power Exhaust Fan section and Options/Accessories table.

Occupied/Unoccupied mode with field furnished setback thermostat.

Demand Control Ventilation (DCV) ready using optional CO_2 sensors.

Mixed Air Sensor is furnished for field installation in the rooftop unit. Sensor is factory installed when Economizers are factory installed.

Single sensible sensor is furnished with Economizer and enables economizer operation if the outdoor temperature is less than the setpoint of the control.

Horizontal Barometric Dampers are required for horizontal Economizer applications and must be ordered separately.

Standard Economizer Features (Not for Title 24)

Gear-driven action, return air and outdoor air dampers, plug-in connections to unit, neoprene seals, 24-volt, fully-modulating spring return motor.

Standard Economizer Control Module

The Standard Economizer Control Module can be adjusted to operate based on outdoor air temperatures.

Economizer Controls:

- Damper Minimum Position - Can be set lower than traditional minimum air requirements resulting in cost savings.
- IAQ Sensor - Signals dampers to modulate and maintain 55°F when CO_2 is higher than the CO_2 setpoint.
- Demand Control Ventilation (DCV) LED - A steady green Demand Control Ventilation LED indicates the IAQ reading is higher than setpoint and requires more fresh air.
- Free Cool LED - A steady green LED indicates outdoor air is suitable for free cooling.

Free Cooling runs when outdoor air temperature is lower than the set temperature on the economizer control.

NOTE: The Free Cooling default setting for outdoor air temperature sensor is 55°F.

High Performance Economizer Features

Approved for California Title 24 building standards.

Low leakage dampers are Air Movement and Control Association International (AMCA) Class 1A Certified - Maximum 3 CFM per sq. ft. leakage at 1 in. w.g.

ASHRAE 90.1-2010 compliant.

Gear-driven action, high torque 24-volt fully-modulating spring return damper motor, return air and outdoor air dampers, plug-in connections to unit, nylon bearings, enhanced neoprene blade edge seals and flexible stainless steel jamb seals to minimize air leakage.

NOTE - High Performance Economizers are not approved for use with enthalpy controls in Title 24 applications.

High Performance Economizer Control Module

Module provides inputs and outputs to control economizer based on parameter settings.

Module automatically detects sensors by polling to determine which sensors are installed in system.

Module displays any alarm messages (fault detection and diagnostics) as an aid in troubleshooting.

Non-volatile memory retains parameter settings in case of power failure.

Keypad with four navigation buttons and LCD screen is furnished for setting economizer parameters.

- Menu Up/Exit button returns to the main menu.
- Arrow Up ▲ button moves to the previous or next parameter within the selected menu.
- Arrow Down ▼ button moves to the next parameter within the selected menu.
- Select (enter) ↵ button confirms parameter selection.

Main Menu Structure:

- STATUS (economizer and system operation status)
- SETPOINTS (settings for various setpoint parameters)
- SYSTEM SETUP (settings/ information about the system)
- ADVANCED SETUP (freeze protection, CO_2 settings, stage 3 delay and additional calibration settings)
- CHECKOUT (damper positions)
- ALARMS (output signal that can be configured for remote alarm monitoring)

ECONOMIZER OPTIONS (continued)

NOTE - The Free Cooling setpoint for Title 24 applications must be set based on the Climate Zone where the system is installed. See Section 140.4 "Prescriptive Requirements for Space Conditioning Systems" of the California Energy Commission's 2013 Building Energy Efficiency Standards.

Refer to Installation Instructions for complete setup information and menu parameters available.

Factory or Field Installed

Single Enthalpy Temperature Control (Not for Title 24)
Outdoor air enthalpy sensor enables Economizer if the outdoor enthalpy is less than the setpoint of the control.

Field Installed

Differential Enthalpy Control (Not for Title 24)
Order two Single Enthalpy Controls. One is field installed in the return air section, the other in the outdoor air section. Allows the economizer control board to select between outdoor air or return air, whichever has lower enthalpy.

Horizontal Barometric Relief Dampers
For use when unit is configured for horizontal applications with an economizer.

Allows relief of excess air.

Blade type dampers prevent blow back and outdoor air infiltration during off cycle.

Field installed in return air duct.

Exhaust hood with bird screen furnished.

Requires Horizontal Economizer Conversion Kit.

Horizontal Economizer Conversion Kit
Insulated panel covers the bottom return air opening on the unit base to convert downflow Economizer to horizontal airflow.

EXHAUST OPTIONS

Field Installed

14 Power Exhaust Fan
Installs internal to unit for downflow applications only with Economizer option. Provides exhaust air pressure relief. Interlocked to run when supply air blower is operating, fan runs when outdoor air dampers are 50% open (adjustable), motor is overload protected.

Fan is 16 in. diameter with 4 fan blades and a 1/3 hp motor.

NOTE - Not available for 024 and 030 models.

NOTE - If Power Exhaust is field installed with a factory installed Economizer, the Economizer must be ordered with No Exhaust option. Barometric Relief Dampers must also be ordered separately for field installation.

OUTDOOR AIR OPTIONS

Factory or Field Installed

Outdoor Air Dampers - Downflow or Horizontal
Single blade damper, 0 to 25% (fixed) outdoor air adjustable, installs in unit.

Automatic model features fully modulating spring return damper motor with plug-in connection.

Manual model features a slide damper. Maximum mixed air temperature in cooling mode: 100°F.

Outdoor Air Hood is furnished.

ROOF CURBS

Nailer strip furnished, mates to unit, US National Roofing Contractors Approved, shipped knocked down.

Hybrid Roof Curbs, Downflow
Roof curb can be assembled using interlocking tabs to fasten corners together. No tools required.

Curb can also be fastened together with furnished hardware.

Available in 8, 14, 18, and 24 inch heights.

Full Perimeter Curbs, Downflow (090 Models Only)
Hybrid roof curbs can be assembled using interlocking tabs to fasten corners together. No tools required.

Hybrid roof curbs can also be fastened together with furnished hardware.

Available in 8, 14, 18, and 24 inch heights.

NOTE - 090 models can be used on smaller 79-3/4 in. Hybrid Roof Curbs (not full perimeter) with 15-3/4 in. overhang at condenser end of unit. See dimension drawing on page 58.

Adjustable Pitch Curb
Fully adjustable pitch curb provides a level platform for rooftop units allowing flexible installations on roofs with uneven or sloped angles.

Maximum slope is 3/4 in. per foot in any direction.

Uses interlocking tabs to fasten corners together. No tools required.

Hardware is furnished to connect upper curb with lower curb.

Available in 14 inch height.

Adaptor Curbs (not shown)
Curbs are regionally sourced. Dimensions will vary based upon the source. Contact your local sales representative for a detailed cut sheet with applicable dimensions.

CEILING DIFFUSERS

Ceiling Diffusers (Flush and Step-Down)
Diffuser face and grilles with white powder coat finish, insulated (UL listed duct liner), diffuser box with collars for duct connection, fixed blades (flush diffusers) and double deflection blades (step-down diffusers), provisions for suspending, internally sealed (prevents recirculation), removable return air grille, adapts to T-bar ceiling grids or plaster ceilings.

Transitions (Supply and Return)
Used with diffusers, installs in roof curb, galvanized steel construction, flanges furnished for duct connection to diffusers, fully insulated.

DEHUMIDIFICATION SYSTEM

NOTE - Not available with Eco-Last™ Coil System. Conventional Fin/Tube condenser coil must be ordered as a factory option.
Factory installed option designed to control humidity.

Provides dehumidification on demand using ASHRAE 90.1 recommended method for comfort conditioning humidity controller.

Unit comes equipped with one row reheat coil, solenoid valve and humidity controller.

A dehumidistat or thermostat with a dehumidification output or a DDC controller with an isolated output is required to control humidity and must be located in the occupied space.

Reheat controls are located in the compressor control section of the unit for easy access.

Benefits
Improves indoor air quality.

Helps prevents damage due to high humidity levels.

Improves comfort levels by reducing space humidity levels.

OPERATION

No Dehumidification Demand
The unit will operate conventionally whenever there is a demand for cooling or heating and no dehumidification demand.

Free cooling is only permitted when there is no demand for dehumidification.

Dehumidification Demand Only
Reheat operation will initiate on a dehumidification demand and does not require a cooling demand.

The unit will operate in the dehumidification mode until the relative humidity of the conditioned space is below the setpoint.

The reheat coil is sized to provide 68°F to 75°F supply air during reheat operation.

This reduces sensible cooling capacity and extends compressor run time to control humidity when the cooling load is low.

A solenoid valve diverts hot gas from the compressor to the reheat coil.

The cooled and dehumidified air from the evaporator is reheated as it passes through the reheat coil.

The de-superheated and partially condensed refrigerant continues to the outdoor condenser coil where condensing is completed. The unit will continue to operate in this mode until the dehumidification demand is satisfied.

Dehumidification and Cooling Demand (Thermostat/Room Sensor Application)

Two-stage compressor models (074S, 090S)
A dehumidification demand sends both the blower (if T type blower is selected) and compressor to high speed.

If both a dehumidification and a Y1 cooling demand occur, the system will ignore the Y1 demand and continue to operate in dehumidification mode.

If a Y2 cooling demand occurs along with a dehumidification demand, the system operates in full cooling mode at full cooling airflow until the Y2 cooling demand is satisfied. Then the system will revert to the dehumidification mode if a dehumidification mode demand is present.

Single speed compressor model (024S through 060S)
A two stage thermostat is required for dehumidification to operate with a single speed system. If both a dehumidification and a Y1 cooling demand occur, the system will ignore the Y1 demand and continue to operate in dehumidification mode until the humidity setpoint is reached. A Y2 demand will shut off dehumidification mode and normal cooling will resume until demand is satisfied.

TYPICAL DEHUMIDIFICATION SCHEMATIC

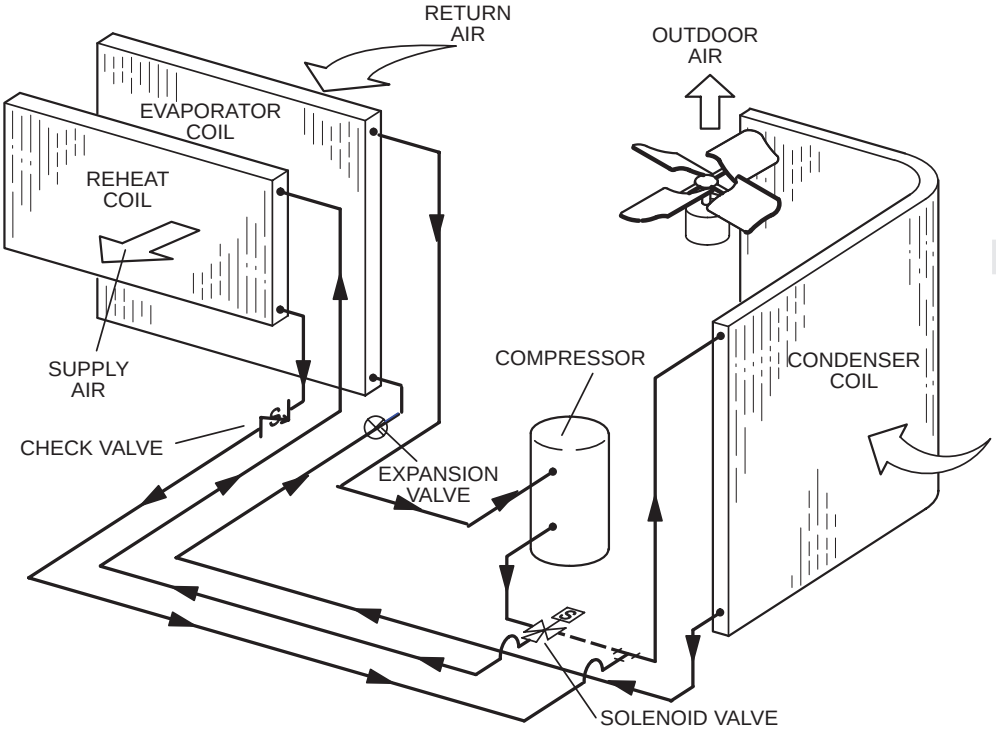

Options/Accessories

Field Installed

Dehumidistat
Remote mounted dehumidistat for factory installed dehumidification option.

Adjustable 20-80%.

NOTE - A thermostat with a dehumidification output or a DDC controller with an isolated output can be used instead.

See Conventional Thermostat Control Systems on page 53 for additional control options.

OPTIONS / ACCESSORIES

Item	Model No.	Catalog No.	Unit Model No. KGB 024	KGB 030	KGB 036	KGB 048	KGB 060	KGB 072	KGB 074	KGB 090
COOLING SYSTEM										
Condensate Drain Trap	PVC - C1TRAP20AD2	**76W26**	X	X	X	X	X	X	X	X
	Copper - C1TRAP10AD2	**76W27**	X	X	X	X	X	X	X	X
Conventional Fin/Tube Condenser Coil (replaces Eco-Last™ Coil System)		Factory	O	O	O	O	O		[1] O	O
Drain Pan Overflow Switch	K1SNSR71AB1-	**74W42**	X	X	X	X	X	X	X	X
Low Ambient Kit	K1SNSR33AN2	**14D89**	X	X	X	X	X	X	X	X
Efficiency		High						O	O	O
		Standard	O	O	O	O	O		O	O
Refrigerant Type		R-410A	O	O	O	O	O	O	O	O
HEATING SYSTEM										
Bottom Gas Piping Kit	T1GPKT01AN1	**19W50**	X	X	X	X	X	X	X	X
Low Temperature Vestibule Heater	208/230V-1 or 3 ph - T1CWKT01AN1Y	**19W53**	X	X	X	X	X	X	X	X
	460V-3ph - T1CWKT01AN1G	**19W54**			X	X	X	X	X	X
	575V-3ph - T1CWKT01AN1J	**19W62**			X	X	X	X	X	X
Combustion Air Intake Extensions	T1EXTN10AN1	**19W51**	X	X	X	X	X	X	X	X
Gas Heat Input	Standard One-Stage - 65 kBtuh input	Factory	O	O	O	O	[3] O	O	O	
	Standard Two-Stage - 53/70 kBtuh input	Factory			[2] O	[2] O	O	[2] O	[2] O	
	Medium One-Stage - 108 kBtuh input	Factory			O	O	[3] O	O	O	O
	Medium Two Stage - 81/108 kBtuh input	Factory			O	O	O	O	O	O
	High One-Stage - 150 kBtuh input	Factory				[3] O	[3] O	O	O	O
	High Two-Stage - 113/150 kBtuh input	Factory				[3] O	O	O	O	O
LPG/Propane Conversion Kits	For one-stage models - C1PROP10AP3	**14N20**	X	X	X	X	X	X	X	X
	For two-stage models - C1PROP20AP3	**14N21**			X	X	X	X	X	X
Stainless Steel Heat Exchanger		Factory	O	O	O	O	O	O	O	O
Vertical Vent Extension	C1EXTN20FF1	**31W62**	X	X	X	X	X	X	X	X

[1] 074S models only.
[2] Standard Two-Stage Heat is only available with Low NOx Models.
[3] Three-Phase models only.

NOTE - The catalog and model numbers that appear here are for ordering field installed accessories only.
OX - Field Installed or Configure to Order (Factory Installed)
O - Configure to Order (Factory Installed)
X - Field Installed

OPTIONS / ACCESSORIES

Item		Model No.	Catalog No.	Unit Model No. KGB 024	KGB 030	KGB 036	KGB 048	KGB 060	KGB 072	KGB 074	KGB 090
BLOWER - SUPPLY AIR											
Motors	Direct Drive (ECM) - 0.33 hp (208/230V-1ph)		Factory	O	O						
	Direct Drive (ECM) - 0.50 hp (208/230V-1ph)		Factory			O					
	Direct Drive (ECM) - 0.75 hp (208/230V-1ph)		Factory				O				
	Direct Drive (ECM) - 1.0 hp (208/230V-1ph)		Factory					O			
	Direct Drive (PSC) - 0.5 hp (208/230V-3ph, 460V-3ph, 575V-3ph)		Factory			O	O				
	Direct Drive (PSC) - 0.75 hp (208/230V-3ph, 460V-3ph, 575V-3ph)		Factory					O			
	Belt Drive - 1 hp (208/230V, 460V, 575V-3ph) Standard Efficiency		Factory			O	O	O	O	[3] O	[4] O
	Belt Drive - 2 hp (208/230V, 460V, 575V-3ph) Standard Efficiency		Factory			O	O	O	O	[3] O	[4] O
	Belt Drive - 3 hp (208/230V, 460V, 575V-3ph) Standard Efficiency		Factory								[4] O
	Belt Drive - 1 hp (208/230V, 460V, 575V-3ph) (2 Speed)		Factory							[3] O	
	Belt Drive - 2 hp (208/230V, 460V, 575V-3ph) (2 Speed)		Factory							[3] O	[5] O
Drive Kits See Blower Data Tables for selection	Kit A01 - T1DRKT001-1 - 673-1010 rpm		Factory			O					
	Kit A02 - T1DRKT002-1 - 745-1117 rpm		Factory				O				
	Kit A03 - T1DRKT003-1 - 833-1250 rpm		Factory					O			
	Kit A04 - T1DRKT004-1 - 968-1340 rpm		Factory						O	[1] O	
	Kit A05 - T1DRKT005-1 - 897-1346 rpm		Factory			O					
	Kit A06 - T1DRKT006-1 - 1071-1429 rpm		Factory				O				
	Kit A07 - T1DRKT007-1 - 1212-1548 rpm		Factory					O			
	Kit A08 - T1DRKT008-1 - 1193-1591 rpm		Factory						O	[1] O	
	Kit AA01 - T1DRKT001AP1 - 522-784 rpm		Factory						O	[2] O	
	Kit AA02 - T1DRKT002AP1 - 632-875 rpm		Factory						O	[2] O	
	Kit AA03 - T1DRKT003AP1 - 798-1105 rpm		Factory						O	[2] O	
	Kit AA04 - T1DRKT004AP1 - 921-1128 rpm		Factory								[6] O
CABINET											
Combination Coil/Hail Guards		C1GARD51A-1	**13R98**	X	X	X	X				
		C1GARD51AT1	**13T03**					X	X	X	
		K1GARD50AP1	**13T17**								X
Corrosion Protection			Factory	O	O	O	O	O	O	O	O
Hinged Access Panels				O	O	O	O	O	O	O	O
CONTROLS											
NOTE - Also see Conventional Thermostat Control Systems on page 53 for Additional Options.											
Smoke Detector - Supply or Return (Power board and one sensor)		C1SNSR44AP1	**53W78**	X	X	X	X	X	X	X	X
Smoke Detector - Supply and Return (Power board and two sensors)		C1SNSR43AP1	**53W79**	X	X	X	X	X	X	X	X

[1] 074S Belt Drive models only.
[2] 074H Belt Drive models only.
[3] KGB074B models have an optional 1hp or 2hp **Single Speed** Belt Drive; KGB074T models have an optional 1hp or 2hp **Two Speed** Belt Drive
[4] KGB090B models have an optional 1hp, 2hp or 3hp Single Speed Belt Drive
[5] KGB090T models have 2hp Two Speed Belt Drive
[6] KGB090B with 3 hp blower motor only.

NOTE - The catalog and model numbers that appear here are for ordering field installed accessories only.
OX - Field Installed or Configure to Order (Factory Installed)
O - Configure to Order (Factory Installed)
X - Field Installed

OPTIONS / ACCESSORIES

Item	Model No.	Catalog No.	Unit Model No. KGB 024	KGB 030	KGB 036	KGB 048	KGB 060	KGB 072	KGB 074	KGB 090
ECONOMIZER										
Standard Economizer With Outdoor Air Hood (Sensible Control) (Not for Title 24)										
Standard Economizer - Includes Barometric Relief Dampers and Exhaust Hood	K1ECON30A-3-	**14D90**	OX	OX	OX	OX	OX	OX	OX	OX
Standard Economizer - No Exhaust		Factory	O	O	O	O	O	O	O	X
Standard Economizer Controls (Not for Title 24)										
Single Enthalpy Control	C1SNSR64FF1	**53W64**	OX	OX	OX	OX	OX	OX	OX	OX
Differential Enthalpy Control (order 2)	C1SNSR64FF1	**53W64**	X	X	X	X	X	X	X	X
High Performance Economizer With Outdoor Air Hood (Sensible Control) (Approved for California Title 24 Building Standards / AMCA Class 1A Certified)										
High Performance Economizer - Includes Barometric Relief Dampers and Exhaust Hood	K1ECON32A-3	**16X75**	OX	OX	OX	OX	OX	OX	OX	OX
High Performance Economizer Controls (Not for Title 24)										
Single Enthalpy Control	C1SNSR60FF1	**10Z75**	OX	OX	OX	OX	OX	OX	OX	OX
Differential Enthalpy Control (order 2)	C1SNSR60FF1	**10Z75**	X	X	X	X	X	X	X	X
Economizer Accessories										
Horizontal Economizer Conversion Kit	T1HECK00AN1	**17W45**	X	X	X	X	X	X	X	X
POWER EXHAUST FAN										
Standard Static	208/230V-1 or 3ph - C1PWRE10A-1P	**79W87**			X	X	X	X	X	X
NOTE - Field installed Power Exhaust Fan requires "Barometric Relief Dampers for Power Exhaust Kit" for field installation. See below.	460V-3ph - C1PWRE10A-1G	**79W88**			X	X	X	X	X	X
	575V-3ph - C1PWRE10A-1J	**79W89**			X	X	X	X	X	X
[1] BAROMETRIC RELIEF										
[1] Barometric Relief Dampers for Power Exhaust Kit	C1DAMP50A-3-	**19D42**			X	X	X	X	X	X
[2] Horizontal Barometric Relief Dampers With Exhaust Hood	LAGEDH03/15-2	**19F01**	X	X	X	X	X	X	X	X
OUTDOOR AIR										
Outdoor Air Dampers With Outdoor Air Hood										
Motorized	C1DAMP21A-1	**15D17**	OX	OX	OX	OX	OX	OX	OX	OX
Manual	C1DAMP11A-2	**15D18**	OX	OX	OX	OX	OX	OX	OX	OX
DEHUMIDIFICATION OPTION										
Dehumidification Option, includes remote mounted Dehumidistat		Factory	O	O	O	O	O		[4] O	O
[3] Dehumidistat, Remote Mounted	C0SNSR30FF1L	**99N41**	X	X	X	X	X		[4] X	X
ELECTRICAL										
Voltage 60 hz	208/230V - 1 phase		O	O	O	O	O			
	208/230V - 3 phase				O	O	O	O	O	O
	460V - 3 phase				O	O	O	O	O	O
	575V - 3 phase				O	O	O	O	O	O
Disconnect	See Electrical Data Tables for selection		OX	OX	OX	OX	OX	OX	OX	OX
GFI Service Outlets	15 amp non-powered, field-wired (208/230V, 460V only) LTAGFIK10/15	**74M70**	OX	OX	OX	OX	OX	OX	OX	OX
	20 amp non-powered, field-wired (575V only) C1GFCI20FF1	**67E01**	X	X	X	X	X	X	X	X
Weatherproof Cover for GFI	C1GFCI99FF1	**10C89**	X	X	X	X	X	X	X	X

[1] Required when Economizer is factory installed with field installed Power Exhaust Fan option.
[2] Required when Economizer is configured for horizontal airflow.
[3] A thermostat with a dehumidification output or a DDC controller with an isolated output can be used instead.
[4] 074S models only.

NOTE - The catalog and model numbers that appear here are for ordering field installed accessories only.
OX - Field Installed or Configure to Order (Factory Installed)
O - Configure to Order (Factory Installed)
X - Field Installed

OPTIONS / ACCESSORIES

Item	Model No.	Catalog No.	Unit Model No. KGB 024	KGB 030	KGB 036	KGB 048	KGB 060	KGB 072	KGB 074	KGB 090
INDOOR AIR QUALITY										
Air Filters										
High Efficiency Air Filters	MERV 8 (16 x 20 x 2) - C1FLTR15A-1-	**54W20**	X	X	X	X				
Order 4 per unit	MERV 13 (16 x 20 x 2) - T1FLTR40A-1-	**52W37**	X	X	X	X				
	MERV 8 (20 x 20 x 2) - C1FLTR15D-1-	**54W21**					X	X	X	X
	MERV 13 (20 x 20 x 2) - C1FLTR40D-1-	**52W39**					X	X	X	X
Indoor Air Quality (Co_2) Sensors										
Sensor - Wall-mount, off-white plastic cover with LCD display	C0SNSR50AE1L	**77N39**	X	X	X	X	X	X	X	X
Sensor - Wall-mount, black plastic case, no display, rated for plenum mounting	C0SNSR53AE1L	**87N54**	X	X	X	X	X	X	X	X
CO_2 Sensor Duct Mounting Kit - for downflow applications	C0MISC19AE1-	**85L43**	X	X	X	X	X	X	X	X
Aspiration Box - for duct mounting non-plenum rated CO_2 sensor (**77N39**)	C0MISC16AE1-	**90N43**	X	X	X	X	X	X	X	X
CEILING DIFFUSERS										
Step-Down - Order one	RTD9-65S	**13K60**	X	X	X	X	X			
	RTD11-95S	**13K61**						X	X	X
Flush - Order one	FD9-65S	**13K55**	X	X	X	X	X			
	FD11-95S	**13K56**						X	X	X
Transitions (Supply and Return) - Order one	T1TRAN10AN1	**17W53**	X	X	X	X	X			
	T1TRAN20N-1	**17W54**						X	X	X
ROOF CURBS										
Hybrid Roof Curbs, Downflow										
8 in. height	C1CURB70A-1	**11F50**	X	X	X	X	X	X	X	[2] X
14 in. height	C1CURB71A-1	**11F51**	X	X	X	X	X	X	X	[2] X
18 in. height	C1CURB72A-1	**11F52**	X	X	X	X	X	X	X	[2] X
24 in. height	C1CURB73A-1	**11F53**	X	X	X	X	X	X	X	[2] X
Hybrid Roof Curbs, Full Perimeter, Downflow										
8 in. height	K1CURB70AP1	**11S47**								X
14 in. height	K1CURB71AP1	**11S48**								X
18 in. height	K1CURB72AP1	**11T01**								X
24 in. height	K1CURB73AP1	**11T06**								X
Adjustable Pitch Curb										
14 in. height	C1CURB55AT1	**43W27**	X	X	X	X	X	X	X	X

NOTE - The catalog and model numbers that appear here are for ordering field installed accessories only.

OX - Field Installed or Configure to Order (Factory Installed)

O - Configure to Order (Factory Installed)

X - Field Installed

SPECIFICATIONS — DIRECT DRIVE BLOWER | 2 - 2.5 TON

General Data	**Nominal Tonnage**	**2 Ton**	**2.5 Ton**
	Model No.	**KGB024S4E**	**KGB030S4E**
	Efficiency Type	**Standard**	**Standard**
	Blower Type	Multi-Speed Direct Drive ECM	Multi-Speed Direct Drive ECM
Cooling Performance	Gross Cooling Capacity - Btuh	24,600	31,000
	[1] Net Cooling Capacity - Btuh	24,000	30,000
	AHRI Rated Air Flow - cfm	810	1,000
	[2] Sound Rating Number (dBA)	74	74
	Total Unit Power - kW	1.9	2.4
	[1] SEER (Btuh/Watt)	14.0	14.0
	[1] EER (Btuh/Watt)	12.5	11.5
Refrigerant Charge	Refrigerant Type	R-410A	R-410A
	Eco-Last™ Coil System	4 lbs. 1 oz.	5 lbs. 5 oz.
	Conventional Fin/Tube Coil	10 lbs. 0 oz.	10 lbs. 8 oz.
	Conventional Fin/Tube With Dehumidification Option	9 lbs. 15 oz.	10 lbs. 7 oz.
Gas Heating Options - See page 21		**Standard (1 Stage)**	**Standard (1 Stage)**
Compressor Type (one per unit)		Scroll	Scroll
Outdoor Coil Eco-Last™ (Fin/Tube)	Net face area - sq. ft.	11.7 (15.6)	11.7 (15.6)
	Number of rows	1 (2)	1 (2)
	Fins per inch	23 (20)	23 (20)
Outdoor Coil Fan	Motor - (No.) HP	(1) 1/4	(1) 1/4
	Motor rpm	825	825
	Total Motor Input - watts	335	335
	Diameter - (No.) in. / No. of blades	(1) 24 - 4	(1) 24 - 4
	Total air volume - cfm	3700	3700
Indoor Coil	Net face area - sq. ft.	7.8	7.8
	Tube diameter - in.	3/8	3/8
	Number of rows	2	3
	Fins per inch	14	14
	Drain Connection (no.) and size - in.	(1) 1 NPT	(1) 1 NPT
	Expansion device type	Balanced Port Thermostatic Expansion Valve, removable power head	
Indoor Blower	Nominal Motor HP	0.33 hp (ECM)	0.33 hp (ECM)
	Wheel nominal diameter x width - in.	(1) 10 x 10	(1) 10 x 10
Filters	Type	Disposable	
	Number and size - in.	(4) 16 x 20 x 2	
Electrical Characteristics - 60 Hz		208/230V 1 phase	208/230V 1 phase

NOTE - Net capacity includes evaporator blower motor heat deduction. Gross capacity does not include evaporator blower motor heat deduction.

[1] AHRI Certified to AHRI Standard 210/240: 95°F outdoor air temperature and 80°F db/67°F wb entering evaporator air; minimum external duct static pressure.

[2] Sound Rating Number rated in accordance with test conditions included in AHRI Standard 270-95.

SPECIFICATIONS — DIRECT DRIVE BLOWER | 3 - 4 TON

General Data	**Nominal Tonnage**	**3 Ton**	**3 Ton**	**4 Ton**	**4 Ton**
	Model No.	**KGB036S4E**	**KGB036S4D**	**KGB048S4E**	**KGB048S4D**
	Efficiency Type	**Standard**	**Standard**	**Standard**	**Standard**
	Blower Type	Multi-Speed Direct Drive ECM	Multi-Speed Direct Drive PSC	Multi-Speed Direct Drive ECM	Multi-Speed Direct Drive PSC
Cooling Performance	Gross Cooling Capacity - Btuh	37,300	37,300	49,700	49,700
	[1] Net Cooling Capacity - Btuh	36,000	36,000	47,500	47,500
	AHRI Rated Air Flow - cfm	1150	1150	1560	1560
	[2] Sound Rating Number (dBA)	74	74	74	74
	Total Unit Power - kW	2.9	2.9	4.1	4.1
	[1] SEER (Btuh/Watt)	14.0	14.0	14.0	14.0
	[1] EER (Btuh/Watt)	12.3	12.3	11.5	11.5
Refrigerant Charge	Refrigerant Type	R-410A	R-410A	R-410A	R-410A
	Eco-Last™ Coil System	5 lbs. 9 oz.	5 lbs. 9 oz.	5 lbs. 10 oz.	5 lbs. 10 oz.
	Conventional Fin/Tube Coil	11 lbs. 3 oz.	11 lbs. 3 oz.	9 lbs. 13 oz.	9 lbs. 13 oz.
	Conventional Fin/Tube With Dehumidification Option	12 lbs. 7 oz.	12 lbs. 7 oz.	9 lbs. 13 oz.	9 lbs. 13 oz.
Gas Heating Options - See page 21		**Standard (1 or 2 Stage) Medium (1 or 2 Stage)**			**Standard (1 or 2 Stage) Medium (1 or 2 Stage) High (1 or 2 Stage)**
Compressor Type (one per unit)		Scroll	Scroll	Scroll	Scroll
Outdoor Coil Eco-Last™ (Fin/Tube)	Net face area - sq. ft.	14.5 (15.6)	14.5 (15.6)	14.5 (15.6)	14.5 (15.6)
	Number of rows	1 (2)	1 (2)	1 (2)	1 (2)
	Fins per inch	23 (20)	23 (20)	23 (20)	23 (20)
Outdoor Coil Fan	Motor - (No.) HP	(1) 1/4	(1) 1/4	(1) 1/4	(1) 1/4
	Motor rpm	825	825	825	825
	Total Motor Input - watts	325	325	325	325
	Diameter - (No.) in. / No. of blades	(1) 24 - 4	(1) 24 - 4	(1) 24 - 4	(1) 24 - 4
	Total air volume - cfm	3950	3950	3950	3950
Indoor Coil	Net face area - sq. ft.	7.8	7.8	7.8	7.8
	Tube diameter - in.	3/8	3/8	3/8	3/8
	Number of rows	3	3	3	3
	Fins per inch	14	14	14	14
	Drain Connection (no.) and size - in.	(1) 1 NPT	(1) 1 NPT	(1) 1 NPT	(1) 1 NPT
	Expansion device type	Balanced Port Thermostatic Expansion Valve, removable power head			
Indoor Blower	Nominal Motor HP	0.50 hp (ECM)	0.50 hp (PSC)	0.75 hp (ECM)	0.50 hp (PSC)
	Wheel nominal diameter x width - in.	(1) 10 x 10	(1) 10 x 10	(1) 10 x 10	(1) 10 x 10
Filters	Type	Disposable			
	Number and size - in.	(4) 16 x 20 x 2			
Electrical Characteristics - 60 Hz		208/230V 1 phase	208/230V, 460V & 575V 3 phase	208/230V 1 phase	208/230V, 460V & 575V 3 phase

NOTE - Net capacity includes evaporator blower motor heat deduction. Gross capacity does not include evaporator blower motor heat deduction.

[1] AHRI Certified to AHRI Standard 210/240: 95°F outdoor air temperature and 80°F db/67°F wb entering evaporator air; minimum external duct static pressure.

[2] Sound Rating Number rated in accordance with test conditions included in AHRI Standard 270-95.

General Data	**Nominal Tonnage**	**5 Ton**	**5 Ton**
	Model No.	**KGB060S4E**	**KGB060S4D**
	Efficiency Type	**Standard**	**Standard**
	Blower Type	Multi-Speed Direct Drive ECM	Multi-Speed Direct Drive PSC
Cooling Performance	Gross Cooling Capacity - Btuh	60,900	60,900
	[1] Net Cooling Capacity - Btuh	58,500	58,500
	AHRI Rated Air Flow - cfm	1760	1760
	[2] Sound Rating Number (dBA)	83	83
	Total Unit Power - kW	5.0	5.0
	[1] SEER (Btuh/Watt)	14.0	14.0
	[1] EER (Btuh/Watt)	11.0	11.0
Refrigerant Charge	Refrigerant Type	R-410A	R-410A
	Eco-Last™ Coil System	8 lbs. 4 oz.	8 lbs. 4 oz.
	Conventional Fin/Tube Coil	14 lbs. 4 oz.	14 lbs. 4 oz.
	Conventional Fin/Tube With Dehumidification Option	15 lbs. 3 oz.	15 lbs. 3 oz.
Gas Heating Options - See page 21		**Standard (2 Stage) Medium (2 Stage) High (2 Stage)**	**Standard (1 or 2 Stage) Medium (1 or 2 Stage) High (1 or 2 Stage)**
Compressor Type (one per unit)		Scroll	Scroll
Outdoor Coil Eco-Last™ (Fin/Tube)	Net face area - sq. ft.	17.8 (19.3)	17.8 (19.3)
	Number of rows	1 (2)	1 (2)
	Fins per inch	23 (20)	23 (20)
Outdoor Coil Fan	Motor - (No.) HP	(1) 1/3	(1) 1/3
	Motor rpm	1075	1075
	Total Motor Input - watts	375	375
	Diameter - (No.) in. / No. of blades	(1) 24 - 3	(1) 24 - 3
	Total air volume - cfm	4700	4700
Indoor Coil	Net face area - sq. ft.	9.7	9.7
	Tube diameter - in.	3/8	3/8
	Number of rows	4	4
	Fins per inch	14	14
	Drain Connection (no.) and size - in.	(1) 1 NPT	(1) 1 NPT
	Expansion device type	Balanced Port Thermostatic Expansion Valve, removable power head	
Indoor Blower	Nominal Motor HP	1 hp (ECM)	0.75 hp (PSC)
	Wheel nominal diameter x width - in.	(1) 11 x 10	(1) 11 x 10
Filters	Type	Disposable	
	Number and size - in.	(4) 20 x 20 x 2	
Electrical Characteristics - 60 Hz		208/230V 1 phase	208/230V, 460V & 575V 3 phase

NOTE - Net capacity includes evaporator blower motor heat deduction. Gross capacity does not include evaporator blower motor heat deduction.

[1] AHRI Certified to AHRI Standard 210/240: 95°F outdoor air temperature and 80°F db/67°F wb entering evaporator air; minimum external duct static pressure.

[2] Sound Rating Number rated in accordance with test conditions included in AHRI Standard 270-95.

SPECIFICATIONS — BELT DRIVE BLOWER | 3 - 5 TON

General Data	**Nominal Tonnage**	**3 Ton**	**4 Ton**	**5 Ton**
	Model No.	**KGB036S4B**	**KGB048S4B**	**KGB060S4B**
	Efficiency Type	**Standard**	**Standard**	**Standard**
	Blower Type	Single Speed Belt Drive	Single Speed Belt Drive	Single Speed Belt Drive
Cooling Performance	Gross Cooling Capacity - Btuh	37,300	49,700	60,900
	[1] Net Cooling Capacity - Btuh	36,000	47,500	58,500
	AHRI Rated Air Flow - cfm	1150	1560	1760
	[2] Sound Rating Number (dBA)	74	74	83
	Total Unit Power - kW	2.9	4.1	5
	[1] SEER (Btuh/Watt)	14.0	14.0	14.0
	[1] EER (Btuh/Watt)	12.3	11.5	11.0
Refrigerant Charge	Refrigerant Type	R-410A	R-410A	R-410A
	Eco-Last™ Coil System	5 lbs. 9 oz.	5 lbs. 10 oz.	8 lbs. 4 oz.
	Conventional Fin/Tube Coil	11 lbs. 3 oz.	9 lbs. 13 oz.	14 lbs. 4 oz.
	Conventional Fin/Tube With Dehumidification Option	12 lbs. 7 oz.	9 lbs. 13 oz.	15 lbs. 3 oz.
Gas Heating Options - See page 21		**Standard (1 or 2 Stage) Medium (1 or 2 Stage)**	**Standard (1 or 2 Stage) Medium (1 or 2 Stage) High (1 or 2 Stage)**	
Compressor Type (one per unit)		Scroll	Scroll	Scroll
Outdoor Coil Eco-Last™ (Fin/Tube)	Net face area - sq. ft.	14.5 (15.6)	14.5 (15.6)	17.8 (19.3)
	Number of rows	1 (2)	1 (2)	1 (2)
	Fins / inch	23 (20)	23 (20)	23 (20)
Outdoor Coil Fan	Motor - (No.) HP	(1) 1/4	(1) 1/4	(1) 1/3
	Motor rpm	825	825	1075
	Total Motor Input - watts	325	325	375
	Diameter - (No.) in. / No. of blades	(1) 24 - 4	(1) 24 - 4	(1) 24 - 3
	Total air volume - cfm	3950	3950	4700
Indoor Coil	Net face area - sq. ft.	7.8	7.8	9.7
	Tube diameter - in.	3/8	3/8	3/8
	Number of rows	3	3	4
	Fins per inch	14	14	14
	Drain Connection (no.) and size - in.	(1) 1 NPT	(1) 1 NPT	(1) 1 NPT
	Expansion device type	Balanced Port Thermostatic Expansion Valve, removable power head		
[3] **Indoor Blower & Drive Selection**	Nominal Motor HP	1 hp, 2 hp	1 hp, 2 hp	1 hp, 2 hp
	Maximum Usable Motor Output (US Only)	1.15 hp, 2.3 hp	1.15 hp, 2.3 hp	1.15 hp, 2.3 hp
	Available Drive Kits	A01 673 - 1010 rpm A05 897 - 1346 rpm	A02 745 - 1117 rpm A06 1071 - 1429 rpm	A03 833 - 1250 rpm A07 1212 - 1548 rpm
	Wheel nominal diameter x width - in.	(1) 10 x 10	(1) 10 x 10	(1) 10 x 10
Filters	Type	Disposable		
	Number and size - in.	(4) 16 x 20 x 2		(4) 20 x 20 x 2
Electrical Characteristics - 60 Hz		208/230V, 460V or 575V − 60 hertz − 3 phase		

NOTE - Net capacity includes evaporator blower motor heat deduction. Gross capacity does not include evaporator blower motor heat deduction.

[1] AHRI Certified to AHRI Standard 210/240: 95°F outdoor air temperature and 80°F db/67°F wb entering evaporator air; minimum external duct static pressure.

[2] Sound Rating Number rated in accordance with test conditions included in AHRI Standard 270-95.

[3] Using total air volume and system static pressure requirements determine from blower performance tables rpm and motor hp required. Maximum usable hp of motors furnished are shown. In Canada, nominal motor hp is also maximum usable motor hp output. If motors of comparable hp are used, be sure to keep within the service factor limitations outlined on the motor nameplate.

General Data	**Nominal Tonnage**	**6 Ton**	**6 Ton**
	Model No.	**KGB072H4B**	**KGB074S4B**
	Efficiency Type	**High**	**Standard**
	Blower Type	Single Speed Belt Drive	Single Speed Belt Drive
Cooling Performance	Gross Cooling Capacity - Btuh	73,500	71,000
	[1] Net Cooling Capacity - Btuh	72,000	68,000
	AHRI Rated Air Flow - cfm	1920	2150
	[2] Sound Rating Number (dBA)	79	79
	Total Unit Power - kW	6.0	6.1
	[1] IEER	13.5	12.7
	[1] EER (Btuh/Watt)	12.0	11.0
Refrigerant Charge	Refrigerant Type	R-410A	R-410A
	Eco-Last™ Coil System	7 lbs. 8 oz.	7 lbs. 2 oz.
	Conventional Fin/Tube Coil	- - -	14 lbs. 8 oz.
	Conventional Fin/Tube With Dehumidification Option	- - -	14 lbs. 11 oz.
Gas Heating Options - See page 21		**Standard (1 or 2 Stage) Medium (1 or 2 Stage) High (1 or 2 Stage)**	**Standard (1 Stage) Medium (1 or 2 Stage) High (1 or 2 Stage)**
Compressor Type (one per unit)		Scroll	Two-Stage Scroll
Outdoor Coil Eco-Last™ (Fin/Tube)	Net face area - sq. ft.	17.8	17.8 (19.3)
	Number of rows	1	1 (2)
	Fins / inch	23	23 (20)
Outdoor Coil Fan	Motor - (No.) HP	(1) 1/3	(1) 1/3
	Motor rpm	1075	1075
	Total Motor Input - watts	410	375
	Diameter - (No.) in. / No. of blades	(1) 24 - 3	(1) 24 - 3
	Total air volume - cfm	4800	4700
Indoor Coil	Net face area - sq. ft.	9.72	9.72
	Tube diameter - in.	3/8	3/8
	Number of rows	4	4
	Fins per inch	14	14
	Drain Connection (no.) and size - in.	(1) 1 NPT	(1) 1 in. NPT
	Expansion device type	Balanced Port Thermostatic Expansion Valve, removable power head	
[3] **Indoor Blower & Drive Selection**	Nominal Motor Output	1 hp, 2 hp	1 hp, 2 hp
	Maximum Usable Motor Output (US Only)	1.15 hp, 2.3 hp	1.15 hp 2.3 hp
	Motor - Drive Kit Number	AA01 522-784 rpm AA02 632-875 rpm AA03 798-1105 rpm	A04 968 - 1340 rpm A08 1193-1591 rpm
	Wheel Nominal Diameter x Width - in.	(1) 15 x 9	10 X 10
Filters	Type	Disposable	Disposable
	Number and size - in.	(4) 20 x 20 x 2	(4) 20 x 20 x 2
Electrical Characteristics - 60 Hz		208/230V, 460V or 575V − 60 hertz − 3 phase	

NOTE - Net capacity includes evaporator blower motor heat deduction. Gross capacity does not include evaporator blower motor heat deduction.

[1] AHRI Certified to AHRI Standard 340/360: 95°F outdoor air temperature and 80°F db/67°F wb entering evaporator air; minimum external duct static pressure.

[2] Sound Rating Number rated in accordance with test conditions included in AHRI Standard 270-95.

[3] Using total air volume and system static pressure requirements determine from blower performance tables rpm and motor hp required. Maximum usable hp of motors furnished are shown. In Canada, nominal motor hp is also maximum usable motor hp output. If motors of comparable hp are used, be sure to keep within the service factor limitations outlined on the motor nameplate.

SPECIFICATIONS — BELT DRIVE BLOWER | 6 TON

General Data	**Nominal Tonnage**	**6 Ton**	**6 Ton**
	Model No.	**KGB074S4T**	**KGB074H4T**
	Efficiency Type	**Standard**	**High**
	Blower Type	Two Speed Belt Drive	Two Speed Belt Drive
Cooling Performance	Gross Cooling Capacity - Btuh	71,000	72,000
	[1] Net Cooling Capacity - Btuh	68,000	69,000
	AHRI Rated Air Flow - cfm	2100	2100
	[2] Sound Rating Number (dBA)	79	79
	Total Unit Power - kW	6.1	5.7
	[1] IEER	15.0	16.0
	[1] EER (Btuh/Watt)	11.2	12.0
Refrigerant Charge	Refrigerant Type	R-410A	R-410A
	Eco-Last™ Coil System	7 lbs. 2 oz.	7 lbs. 2 oz.
	Conventional Fin/Tube Coil	14 lbs. 8 oz.	- - -
	Conventional Fin/Tube With Dehumidification Option	14 lbs. 11 oz.	- - -
Gas Heating Options - See page 21		**Standard (1 or 2 Stage), Medium (1 or 2 Stage), or High (1 or 2 Stage)**	**Standard (1 or 2 Stage), Medium (1 or 2 Stage), or High (1 or 2 Stage)**
Compressor Type (one per unit)		Two-Stage Scroll	Two-Stage Scroll
Outdoor Coil Eco-Last™ (Fin/Tube)	Net face area - sq. ft.	17.8 (19.3)	17.8
	Number of rows	1 (2)	1
	Fins / inch	23 (20)	23
Outdoor Coil Fan	Motor - (No.) HP	(1) 1/3	(1) 1/3
	Motor rpm	1075	1075
	Total Motor Input - watts	375	375
	Diameter - (No.) in. / No. of blades	(1) 24 - 3	(1) 24 - 3
	Total air volume - cfm	4700	4700
Indoor Coil	Net face area - sq. ft.	9.72	9.72
	Tube diameter - in.	3/8	3/8
	Number of rows	4	4
	Fins per inch	14	14
	Drain Connection (no.) and size - in.	(1) 1 NPT	(1) 1 NPT
	Expansion device type	Balanced Port Thermostatic Expansion Valve, removable power head	
[3] Indoor Blower & Drive Selection	Nominal Motor Output	1 hp, 2 hp	1 hp, 2 hp
	Maximum Usable Motor Output (US Only)	1.15 hp, 2.3 hp	1.15 hp, 2.3 hp
	Motor - Drive Kit Number	A04 968 - 1340 rpm A08 1193-1591 rpm	AA01 522-784 rpm AA02 632-875 rpm AA03 798-1105 rpm
	Wheel Nominal Diameter x Width - in.	(1) 10 x 10	(1) 15 x 9
Filters	Type	Disposable	
	Number and size - in.	(4) 20 x 20 x 2	(4) 20 x 20 x 2
Electrical Characteristics - 60 Hz		208/230V, 460V or 575V − 60 hertz − 3 phase	

NOTE - Net capacity includes evaporator blower motor heat deduction. Gross capacity does not include evaporator blower motor heat deduction.

[1] AHRI Certified to AHRI Standard 340/360: 95°F outdoor air temperature and 80°F db/67°F wb entering evaporator air; minimum external duct static pressure.

[2] Sound Rating Number rated in accordance with test conditions included in AHRI Standard 270-95.

[3] Using total air volume and system static pressure requirements determine from blower performance tables rpm and motor hp required. Maximum usable hp of motors furnished are shown. In Canada, nominal motor hp is also maximum usable motor hp output. If motors of comparable hp are used, be sure to keep within the service factor limitations outlined on the motor nameplate.

General Data	**Nominal Tonnage**	**7.5 Ton**	**7.5 Ton**
	Model No.	**KGB090S4B**	**KGB090S4T**
	Efficiency Type	**Standard**	**Standard**
	Blower Type	Single Speed Belt Drive	Two Speed Belt Drive
Cooling Performance	Gross Cooling Capacity - Btuh	92,000	92,000
	[1] Net Cooling Capacity - Btuh	88,000	88,000
	AHRI Rated Air Flow - cfm	2250	2250
	[2] Sound Rating Number (dBA)	79	79
	Total Unit Power - kW	8.0	8.0
	[1] IEER	12.7	14.0
	[1] EER (Btuh/Watt)	11.0	11.0
Refrigerant Charge	Refrigerant Type	R-410A	R-410A
	Eco-Last™ Coil System	9 lbs. 4 oz.	9 lbs. 4 oz.
	Conventional Fin/Tube Coil	17 lbs. 14 oz.	17 lbs. 14 oz.
	Conventional Fin/Tube With Dehumidification Option	19 lbs. 14 oz.	19 lbs. 14 oz.
Gas Heating Options - See page 21		**Medium (1 or 2 stage) High (1 or 2 stage)**	**Medium (1 or 2 stage) High (1 or 2 stage)**
Compressor Type (one per unit)		Two-Stage Scroll	Two-Stage Scroll
Outdoor Coil Eco-Last™ (Fin/Tube)	Net face area - sq. ft.	24.2 (27.7)	24.2 (27.7)
	Number of rows	1 (2)	1 (2)
	Fins / inch	23 (20)	23 (20)
Outdoor Coil Fan	Motor - (No.) HP	(1) 1/2	(1) 1/2
	Motor rpm	1075	1075
	Total Motor Input - watts	520	520
	Diameter - (No.) in. / No. of blades	(1) 24 - 4	(1) 24 - 4
	Total air volume - cfm	5300	5300
Indoor Coil	Net face area - sq. ft.	9.72	9.72
	Tube diameter - in.	3/8	3/8
	Number of rows	4	4
	Fins per inch	14	14
	Drain Connection (no.) and size - in.	(1) 1 in. NPT	(1) 1 in. NPT
	Expansion device type	Balanced Port Thermostatic Expansion Valve, removable power head	
[3] **Indoor Blower & Drive Selection**	Nominal Motor Output	1 hp, 2 hp, 3hp	2 hp
	Maximum Usable Motor Output (US Only)	1.15 hp 2.3 hp, 3.45 hp	2.3 hp
	Motor - Drive Kit Number	AA01 522-784 rpm AA02 632-875 rpm AA03 798-1105 rpm [4] AA04 921-1228	AA01 522-784 rpm AA02 632-875 rpm AA03 798-1105 rpm
	Wheel Nominal Diameter x Width - in.	(1) 15 x 9	(1) 15 x 9
Filters	Type	Disposable	
	Number and size - in.	(4) 20 x 20 x 2	(4) 20 x 20 x 2
Electrical Characteristics - 60 Hz		208/230V, 460V or 575V − 60 hertz − 3 phase	

NOTE - Net capacity includes evaporator blower motor heat deduction. Gross capacity does not include evaporator blower motor heat deduction.

[1] AHRI Certified to AHRI Standard 340/360: 95°F outdoor air temperature and 80°F db/67°F wb entering evaporator air; minimum external duct static pressure.

[2] Sound Rating Number rated in accordance with test conditions included in AHRI Standard 270-95.

[3] Using total air volume and system static pressure requirements determine from blower performance tables rpm and motor hp required. Maximum usable hp of motors furnished are shown. In Canada, nominal motor hp is also maximum usable motor hp output. If motors of comparable hp are used, be sure to keep within the service factor limitations outlined on the motor nameplate.

[4] 3 hp blower motor only.

SPECIFICATIONS - STANDARD GAS HEAT — THREE PHASE MODELS

Model No.	036 048 060 074S	072H 074H	036 048 060 074S	072H 074H 090S	036 048 060 074S	072H 074H 090S	048 060 074S	072H 074H 090S	048 060 074S	072H 074H 090S
Heat Input Type	Standard (1 Stage)		Medium (1 Stage)		Medium (2 Stage)		High (1 Stage)		High (2 Stage)	
Input Btuh 1st Stage	65,000		108,000		81,000		150,000		113,000	
Input Btuh 2nd Stage	- - -		- - -		108,000		- - -		150,000	
Output Btuh 1st Stage	52,000		86,000		65,000		120,000		90,000	
Output Btuh 2nd Stage	- - -		- - -		86,000		- - -		120,000	
Temperature Rise Range - °F 1st stage	- - -	- - -	30 - 70	15 - 45	25 - 55	10 - 40	- - -	- - -	30 - 60	15 - 45
Temperature Rise Range - °F 2nd Stage	15 - 45	5 - 35	- - -	- - -	30 - 70	15 - 45	45 - 75	25 -55	45 - 75	25 - 55
[1] Thermal Efficiency Standard	80%		80%	80%	80%	80%	80%	80%	80%	80%
Gas Supply Connections	1/2 in. NPT									
Rec. Gas Supply Pressure - Nat./ LPG	7 in.w.g. / 11 in.w.g.									

[1] Thermal Efficiency at full input.

SPECIFICATIONS - LOW NOX GAS HEAT — SINGLE AND THREE PHASE MODELS

Model No.	024 030	036 048 060 074S	072H 074H	036 048 060 074S	072H 074H	036 048 060 074S	072 074	036 048 060 074S	072H 074H	048 060 074S	072H 074H	048 060 074S	072H 074H
Heat Input Type	Standard (1 Stage)			Standard (2 Stage) Low NOx Only		Medium (1 Stage)		Medium (2 Stage)		High (1 Stage)		High (2 Stage)	
Input Btuh 1st Stage	65,000			53,000		108,000		81,000		150,000		113,000	
Input Btuh 2nd Stage	- - -			70,000		- - -		108,000		- - -		150,000	
Output Btuh 1st Stage	52,000			43,000		87,000		66,000		121,000		92,000	
Output Btuh 2nd Stage	- - -			57,000		- - -		87,000		- - -		121,000	
Temperature Rise Range - °F 1st stage	35 - 65	15 - 45	5-35	5-35	5-35	30 - 70	15 - 45	25 - 55	10 - 40	- - -	- - -	30 - 60	15 - 45
Temperature Rise Range - °F 2nd Stage	- - -	- - -	- - -	15-45	10-40	- - -	- - -	30 - 70	15 - 45	45 - 75	25 - 55	45 - 75	25 - 55
[1] AFUE (single phase)	81%	81%	81%	81%	81%	81%	81%	81%	81%	81%	81%	81%	81%
[2] Thermal Efficiency (three phase)	81%	81%	81%	81%	81%	81%	81%	81%	81%	81%	81%	81%	81%
Gas Supply Connections	1/2 in. NPT												
Rec. Gas Supply Pressure - Nat./ LPG	7 in.w.g. / 11 in.w.g.												

[1] Annual Fuel Utilization Efficiency based on U.S. DOE test procedures and FTC labeling regulations - 1 phase models only.

[2] Thermal Efficiency at full input.

HIGH ALTITUDE DERATE

NOTE - Units may be installed at altitudes up to 2000 ft. above sea level without any modifications. At altitudes above 2000 ft. units must be derated to match information in the table shown. At altitudes above 4500 ft. unit must be derated 2% for each 1000 ft. above sea level.
NOTE - This is the only permissible derate for these units.

Heat Input Type	Altitude Feet	Gas Manifold Pressure in. w.g.		Input Rate (Btuh)
		Natural Gas	LPG/ Propane	
Standard (1 stage)	2001 - 4500	3.0	9.0	60,000
Standard (2 stage)	2001 - 4500	3.0/1.7	9.0/5.1	65,000 / 49,000
Medium (1 stage)	2001 - 4500	3.0	9.0	100,000
Medium (2 stage)	2001 - 4500	3.0/1.7	9.0/5.1	100,000 / 75,000
High (1 stage)	2001 - 4500	3.0	9.0	139,000
High (2 stage)	2001 - 4500	3.0/1.7	9.0/5.1	139,000 / 104,000

AHRI DATA - HEATING - 1 PH MODELS

NOTE - Temperatures and Capacities Must Be Interpolated in tables, see Bulletin − Cooling Unit Ratings Interpolation Factor Data in Miscellaneous Heat Engineering Selection.

Model Number (Drive Type)	Type Gas Heat Size (All Low NOx)	AHRI Reference Number
2 TON - KGB024S4		
KGB024 (Belt)	W Standard, 1 Stage	8203304
KGB030 (Direct)	W Standard, 1 Stage	8203331
KGB036 (Direct)	W Standard, 1 Stage	8203388
	B Standard, 2 Stage	
	Y Medium, 1 Stage	8203394
	Q Medium, 2 Stage	8203373
KGB036 (Belt)	W Standard, 1 Stage	8203371
	B Standard, 2 Stage	
	Y Medium, 1 Stage	8203372
	Q Medium, 2 Stage	8203370
KGB048 (Direct)	W Standard, 1 Stage	8203407
	Y Medium, 1 Stage	8203409
	Q Medium, 2 Stage	8203406
	Z High, 1 Stage	8203410
	X High, 2 Stage	8203408

Entering Wet Bulb Temperature	Total Air Volume	Outdoor Air Temperature Entering Outdoor Coil 85°F: Total Cool Cap.	85°F: Comp. Motor Input	85°F: Sensible To Total Ratio (S/T) Dry Bulb 75°F	85°F: 80°F	85°F: 85°F	95°F: Total Cool Cap.	95°F: Comp. Motor Input	95°F: Sensible To Total Ratio (S/T) Dry Bulb 75°F	95°F: 80°F	95°F: 85°F	105°F: Total Cool Cap.	105°F: Comp. Motor Input	105°F: Sensible To Total Ratio (S/T) Dry Bulb 75°F	105°F: 80°F	105°F: 85°F
	cfm	kBtuh	kW	75°F	80°F	85°F	kBtuh	kW	75°F	80°F	85°F	kBtuh	kW	75°F	80°F	85°F
63°F	640	23.2	1.31	0.69	0.84	0.99	21.7	1.49	0.7	0.86	1	20.1	1.72	0.71	0.88	1
	800	24.6								0.95	1	21.4	1.7	0.78	1	1
	960	25.8								1	1	22.7	1.69	0.85	1	1
67°F	640	24.5	1.3	0.54	0.67	0.81	23	1.48	0.54	0.68	0.82	21.4	1.71	0.54	0.68	0.82
	800	26.1	1.28	0.58	0.72	0.89	24.5	1.47	0.58	0.74	0.91	22.7	1.69	0.58	0.74	0.91
	960	27.2								0.8	0.99	23.7	1.68	0.62	0.8	0.99
71°F	640	25.7	1.29	0.41	0.53	0.65	24.2	1.47	0.4	0.53	0.66	22.6	1.7	0.39	0.53	0.66
	800	27.4	1.27	0.42	0.57	0.7	25.8	1.45	0.42	0.57	0.72	24	1.68	0.41	0.57	0.72
	960	28.6								0.61	0.77	25	1.66	0.43	0.61	0.77

AHRI DATA - HEATING - 1 PH MODELS

Model Number (Drive Type)	Type Gas Heat Size (All Low NOx)	AHRI Reference Number
KGB048 (Belt)	W Standard, 1 Stage	8203396
	Y Medium, 1 Stage	8203398
	Q Medium, 2 Stage	8203395
	Z High, 1 Stage	8203405
	X High, 2 Stage	8203397
KGB060 (Direct)	W Standard, 1 Stage	8203421
	B Standard, 2 Stage	
	Y Medium, 1 Stage	8203423
	Q Medium, 2 Stage	8203420
	Z High, 1 Stage	8203424
	X High, 2 Stage	8203422
KGB060 (Belt)	W Standard, 1 Stage	8203416
	B Standard, 2 Stage	
	Y Medium, 1 Stage	8203418
	Q Medium, 2 Stage	8203415
	Z High, 1 Stage	8203419
	X High, 2 Stage	8203417

Entering Wet Bulb Temperature	Total Air Volume	Outdoor Air Temperature Entering Outdoor Coil 85°F: Total Cool Cap.	85°F: Comp. Motor Input	85°F: Sensible To Total Ratio (S/T) Dry Bulb 75°F	85°F: 80°F	85°F: 85°F	95°F: Total Cool Cap.	95°F: Comp. Motor Input	95°F: Sensible To Total Ratio (S/T) Dry Bulb 75°F	95°F: 80°F	95°F: 85°F	105°F: Total Cool Cap.	105°F: Comp. Motor Input	105°F: Sensible To Total Ratio (S/T) Dry Bulb 75°F	105°F: 80°F	105°F: 85°F	115°F: Total Cool Cap.	115°F: Comp. Motor Input	115°F: Sensible To Total Ratio (S/T) Dry Bulb 75°F	115°F: 80°F	115°F: 85°F
	cfm	kBtuh	kW	75°F	80°F	85°F	kBtuh	kW	75°F	80°F	85°F	kBtuh	kW	75°F	80°F	85°F	kBtuh	kW	75°F	80°F	85°F
63°F	800	29.2	1.66	0.7	0.85	1	28.1	1.9	0.71	0.87	1	26.3	2.21	0.73	0.9	1	24.6	2.69	0.74	0.93	1
	1000	30.7	1.66	0.76	0.95	1	29.5	1.9	0.77	0.97	1	27.7	2.21	0.79	1	1	25.9	2.69	0.8	1	1
	1200	32	1.66	0.82	1	1	30.9	1.91	0.83	1	1	29.2	2.22	0.86	1	1	27.3	2.69	0.9	1	1
67°F	800	30.9	1.66	0.55	0.68	0.82	29.7	1.91	0.55	0.69	0.83	27.9	2.22	0.56	0.7	0.86	26.2	2.69	0.56	0.72	0.89
	1000	32.3	1.67	0.59	0.74	0.92	31.1	1.91	0.59	0.75	0.93	29.2	2.22	0.6	0.77	0.96	27.3	2.68	0.61	0.79	0.99
	1200	33.3	1.67	0.6	0.8	1	32	1.92	0.62	0.81	1	30.1	2.22	0.63	0.84	1	28.2	2.7	0.65	0.87	1
71°F	800	32.5	1.67	0.41	0.54	0.66	31.3	1.91	0.41	0.54	0.67	29.5	2.22	0.41	0.55	0.68	27.7	2.69	0.41	0.56	0.7
	1000	33.9	1.67	0.44	0.58	0.73	32.6	1.92	0.43	0.58	0.73	30.7	2.23	0.43	0.59	0.75	28.8	2.69	0.43	0.59	0.77
	1200	34.8	1.68	0.44	0.61	0.78	33.5	1.92	0.44	0.6	0.8	31.5	2.23	0.44	0.63	0.83	29.7	2.69	0.44	0.64	0.85

NOTE - All models are 208/230V-1 phase-60hz only.

[1] Model Number Heat Designation.

NOTE - All models are 208/230V-1 phase-60hz only.

[1] Model Number Heat Designation.

3 TON - KGB036S4

Entering Wet Bulb Temperature	Total Air Volume	Outdoor Air Temperature Entering Outdoor Coil 85°F: Total Cool Cap.	85°F: Comp. Motor Input	85°F: Sensible To Total Ratio (S/T) Dry Bulb 75°F	85°F: 80°F	85°F: 85°F	95°F: Total Cool Cap.	95°F: Comp. Motor Input	95°F: Sensible To Total Ratio (S/T) Dry Bulb 75°F	95°F: 80°F	95°F: 85°F	105°F: Total Cool Cap.	105°F: Comp. Motor Input	105°F: Sensible To Total Ratio (S/T) Dry Bulb 75°F	105°F: 80°F	105°F: 85°F	115°F: Total Cool Cap.	115°F: Comp. Motor Input	115°F: Sensible To Total Ratio (S/T) Dry Bulb 75°F	115°F: 80°F	115°F: 85°F
	cfm	kBtuh	kW	75°F	80°F	85°F	kBtuh	kW	75°F	80°F	85°F	kBtuh	kW	75°F	80°F	85°F	kBtuh	kW	75°F	80°F	85°F
63°F	960	36.5	2.01	0.69	0.85	1	34.3	2.29	0.7	0.87	1	32	2.63	0.71	0.89	1	29.5	3.05	0.72	0.92	1
	1200	38.6	2.02	0.75	0.94	1	36.3	2.3	0.77	0.97	1	33.9	2.63	0.78	1	1	31.5	3.05	0.8	1	1
	1440	40.4	2.03	0.82	1	1	38.2	2.3	0.83	1	1	36	2.63	0.86	1	1	33.6	3.04	0.89	1	1
67°F	960	39	2.02	0.54	0.67	0.81	36.8	2.3	0.54	0.68	0.83	34.4	2.63	0.54	0.69	0.85	31.8	3.04	0.54	0.7	0.88
	1200	41.1	2.03	0.57	0.73	0.9	38.8	2.31	0.58	0.74	0.93	36.3	2.63	0.58	0.76	0.96	33.6	3.04	0.59	0.78	0.99
	1440	42.7	2.04	0.61	0.79	0.99	40.2	2.31	0.62	0.81	1	37.5	2.64	0.62	0.83	1	34.9	3.05	0.63	0.86	1
71°F	960	41.4	2.03	0.4	0.53	0.65	39.1	2.31	0.4	0.53	0.65	36.7	2.63	0.38	0.53	0.67	34.1	3.04	0.38	0.53	0.68
	1200	43.7	2.05	0.42	0.56	0.71	41.3	2.32	0.41	0.57	0.72	38.7	2.64	0.41	0.57	0.74	36.1	3.04	0.4	0.58	0.75
	1440	45.3	2.06	0.43	0.6	0.77	42.8	2.33	0.43	0.61	0.79	40.1	2.65	0.43	0.61	0.81	37.3	3.04	0.42	0.63	0.83

4 TON - KGB048S4

Entering Wet Bulb Temperature	Total Air Volume	Outdoor Air Temperature Entering Outdoor Coil 85°F: Total Cool Cap.	85°F: Comp. Motor Input	85°F: Sensible To Total Ratio (S/T) Dry Bulb 75°F	85°F: 80°F	85°F: 85°F	95°F: Total Cool Cap.	95°F: Comp. Motor Input	95°F: Sensible To Total Ratio (S/T) Dry Bulb 75°F	95°F: 80°F	95°F: 85°F	105°F: Total Cool Cap.	105°F: Comp. Motor Input	105°F: Sensible To Total Ratio (S/T) Dry Bulb 75°F	105°F: 80°F	105°F: 85°F	115°F: Total Cool Cap.	115°F: Comp. Motor Input	115°F: Sensible To Total Ratio (S/T) Dry Bulb 75°F	115°F: 80°F	115°F: 85°F
	cfm	kBtuh	kW	75°F	80°F	85°F	kBtuh	kW	75°F	80°F	85°F	kBtuh	kW	75°F	80°F	85°F	kBtuh	kW	75°F	80°F	85°F
63°F	1280	47.6	2.86	0.68	0.84	1	44.1	3.23	0.69	0.87	1	40.7	3.66	0.7	0.9	1	37.1	4.16	0.72	0.95	1
	1600	50.1	2.88	0.74	0.95	1	46.6	3.25	0.76	0.98	1	43.1	3.68	0.78	1	1	39.7	4.19	0.81	1	1
	1920	52.5	2.89	0.81	1	1	49.1	3.27	0.83	1	1	45.7	3.7	0.87	1	1	42.2	4.21	0.91	1	1
67°F	1280	50.9	2.88	0.53	0.66	0.8	47.3	3.26	0.53	0.67	0.83	43.8	3.69	0.53	0.68	0.86	40.1	4.19	0.53	0.7	0.9
	1600	53.6	2.89	0.56	0.72	0.91	49.7	3.27	0.57	0.73	0.94	46	3.71	0.57	0.76	0.98	42	4.21	0.58	0.79	1
	1920	55.4	2.9	0.6	0.78	1	51.4	3.29	0.6	0.81	1	47.5	3.72	0.61	0.84	1	43.3	4.22	0.63	0.88	1
71°F	1280	54.1	2.9	0.39	0.52	0.64	50.4	3.28	0.38	0.52	0.65	46.8	3.71	0.37	0.52	0.66	42.8	4.21	0.37	0.52	0.68
	1600	56.8	2.91	0.41	0.55	0.7	52.9	3.3	0.4	0.56	0.71	49.1	3.73	0.4	0.57	0.73	45	4.23	0.39	0.58	0.76
	1920	58.9	2.92	0.42	0.59	0.76	54.8	3.31	0.42	0.6	0.79	50.8	3.74	0.42	0.61	0.82	46.5	4.25	0.41	0.62	0.86

RATINGS

NOTE − For Temperatures and Capacities not shown in tables, see bulletin − Cooling Unit Rating Table Correction Factor Data in Miscellaneous Engineering Data section.

5 TON - KGB060S4

Entering Wet Bulb Temperature	Total Air Volume	Outdoor Air Temperature Entering Outdoor Coil																			
		85°F					95°F					105°F					115°F				
		Total Cool Cap.	Comp. Motor Input	Sensible To Total Ratio (S/T) Dry Bulb			Total Cool Cap.	Comp. Motor Input	Sensible To Total Ratio (S/T) Dry Bulb			Total Cool Cap.	Comp. Motor Input	Sensible To Total Ratio (S/T) Dry Bulb			Total Cool Cap.	Comp. Motor Input	Sensible To Total Ratio (S/T) Dry Bulb		
	cfm	kBtuh	kW	75°F	80°F	85°F	kBtuh	kW	75°F	80°F	85°F	kBtuh	kW	75°F	80°F	85°F	kBtuh	kW	75°F	80°F	85°F
63°F	1600	60.1	3.41	0.68	0.84	1	56.8	3.86	0.7	0.86	1	53.1	4.39	0.71	0.89	1	48.9	5	0.73	0.93	1
	2000	63.5	3.44	0.75	0.95	1	59.9	3.88	0.76	0.97	1	55.9	4.41	0.78	1	1	51.9	5.02	0.81	1	1
	2400	66.4	3.45	0.8	1	1	63.1	3.91	0.83	1	1	59.5	4.44	0.86	1	1	55.3	5.07	0.9	1	1
67°F	1600	64.3	3.44	0.53	0.66	0.81	60.8	3.89	0.54	0.67	0.82	56.9	4.42	0.54	0.69	0.85	52.5	5.04	0.55	0.7	0.89
	2000	67.8	3.46	0.58	0.72	0.9	64	3.91	0.57	0.74	0.93	59.7	4.44	0.58	0.75	0.96	55.1	5.07	0.59	0.78	1
	2400	70.3	3.47	0.6	0.78	0.99	66.3	3.92	0.61	0.81	1	61.7	4.46	0.62	0.83	1	56.8	5.08	0.63	0.88	1
71°F	1600	68.8	3.46	0.4	0.52	0.64	65.2	3.92	0.4	0.53	0.65	61.1	4.45	0.39	0.53	0.66	56.3	5.08	0.38	0.54	0.68
	2000	72.5	3.48	0.41	0.57	0.7	68.4	3.94	0.41	0.56	0.72	63.8	4.47	0.41	0.57	0.73	58.7	5.1	0.41	0.58	0.75
	2400	74.7	3.49	0.42	0.59	0.76	70.5	3.95	0.43	0.6	0.78	66	4.49	0.43	0.61	0.81	60.7	5.12	0.42	0.63	0.85

6 TON - KGB072H4

Entering Wet Bulb Temperature	Total Air Volume	Outdoor Air Temperature Entering Outdoor Coil																			
		85°F					95°F					105°F					115°F				
		Total Cool Cap.	Comp. Motor Input	Sensible To Total Ratio (S/T) Dry Bulb			Total Cool Cap.	Comp. Motor Input	Sensible To Total Ratio (S/T) Dry Bulb			Total Cool Cap.	Comp. Motor Input	Sensible To Total Ratio (S/T) Dry Bulb			Total Cool Cap.	Comp. Motor Input	Sensible To Total Ratio (S/T) Dry Bulb		
	cfm	kBtuh	kW	75°F	80°F	85°F	kBtuh	kW	75°F	80°F	85°F	kBtuh	kW	75°F	80°F	85°F	kBtuh	kW	75°F	80°F	85°F
63°F	1920	68.1	4.47	0.67	0.83	1	64.4	4.95	0.68	0.86	1	60.3	5.5	0.7	0.9	1	55.9	6.12	0.71	0.94	1
	2400	71.8	4.48	0.72	0.94	1	67.8	4.97	0.74	0.97	1	63.4	5.51	0.77	1	1	59.4	6.14	0.81	1	1
	2880	74.6	4.49	0.79	1	1	71	4.98	0.82	1	1	67.1	5.53	0.85	1	1	62.8	6.16	0.9	1	1
67°F	1920	72.4	4.48	0.52	0.64	0.78	68.7	4.97	0.53	0.65	0.81	64.7	5.52	0.54	0.67	0.84	60	6.15	0.55	0.69	0.89
	2400	76.3	4.5	0.56	0.7	0.89	72.2	4.99	0.56	0.71	0.92	67.3	5.53	0.57	0.74	0.96	62.7	6.17	0.59	0.77	1
	2880	78.8	4.51	0.58	0.76	0.98	74.6	5	0.59	0.79	1	69.7	5.55	0.6	0.82	1	64.7	6.18	0.62	0.87	1
71°F	1920	77.2	4.5	0.39	0.51	0.62	73.1	4.99	0.39	0.51	0.63	68.7	5.54	0.4	0.52	0.65	63.9	6.17	0.4	0.54	0.67
	2400	81	4.52	0.41	0.55	0.68	76.7	5.01	0.41	0.55	0.69	71.9	5.56	0.41	0.56	0.71	66.6	6.19	0.41	0.57	0.74
	2880	83.4	4.53	0.42	0.58	0.73	79	5.02	0.42	0.58	0.75	74.1	5.57	0.43	0.6	0.79	68.7	6.2	0.43	0.61	0.83

6 TON - STANDARD EFFICIENCY KGB074S4B (1ST STAGE)

Entering Wet Bulb Temperature	Total Air Volume	Outdoor Air Temperature Entering Outdoor Coil																			
		65°F					75°F					85°F					95°F				
		Total Cool Cap.	Comp. Motor Input	Sensible To Total Ratio (S/T) Dry Bulb			Total Cool Cap.	Comp. Motor Input	Sensible To Total Ratio (S/T) Dry Bulb			Total Cool Cap.	Comp. Motor Input	Sensible To Total Ratio (S/T) Dry Bulb			Total Cool Cap.	Comp. Motor Input	Sensible To Total Ratio (S/T) Dry Bulb		
	cfm	kBtuh	kW	75°F	80°F	85°F	kBtuh	kW	75°F	80°F	85°F	kBtuh	kW	75°F	80°F	85°F	kBtuh	kW	75°F	80°F	85°F
63°F	1920	61.9	2.05	0.79	0.94	1	58.8	2.43	0.8	0.96	1	55.5	2.85	0.81	0.98	1	52.1	3.3	0.83	1	1
	2400	65.2	2.03	0.85	1	1	62.5	2.42	0.87	1	1	59.5	2.84	0.89	1	1	56	3.29	0.92	1	1
	2880	68.9	2.02	0.91	1	1	65.9	2.41	0.94	1	1	62.7	2.83	0.96	1	1	59.1	3.29	0.99	1	1
67°F	1920	66	2.03	0.61	0.76	0.91	62.8	2.42	0.62	0.77	0.93	59.3	2.84	0.62	0.78	0.95	55.6	3.3	0.63	0.81	0.98
	2400	69	2.02	0.65	0.82	0.99	65.6	2.41	0.66	0.84	1	61.9	2.83	0.66	0.86	1	58	3.29	0.68	0.89	1
	2880	71.2	2.01	0.68	0.89	1	67.7	2.4	0.7	0.91	1	63.9	2.82	0.71	0.94	1	60	3.29	0.73	0.97	1
71°F	1920	70.3	2.01	0.45	0.6	0.74	67	2.4	0.45	0.61	0.75	63.4	2.83	0.45	0.61	0.76	59.5	3.29	0.45	0.62	0.78
	2400	73.4	2	0.44	0.64	0.8	69.8	2.39	0.48	0.64	0.81	66.2	2.82	0.47	0.66	0.83	62	3.29	0.47	0.67	0.86
	2880	75.8	1.99	0.48	0.68	0.87	72.1	2.39	0.49	0.69	0.88	68.1	2.82	0.49	0.71	0.91	63.9	3.28	0.5	0.73	0.94

6 TON - STANDARD EFFICIENCY KGB074S4B (2ND STAGE)

Entering Wet Bulb Temperature	Total Air Volume	Outdoor Air Temperature Entering Outdoor Coil																			
		85°F					95°F					105°F					115°F				
		Total Cool Cap.	Comp. Motor Input	Sensible To Total Ratio (S/T) Dry Bulb			Total Cool Cap.	Comp. Motor Input	Sensible To Total Ratio (S/T) Dry Bulb			Total Cool Cap.	Comp. Motor Input	Sensible To Total Ratio (S/T) Dry Bulb			Total Cool Cap.	Comp. Motor Input	Sensible To Total Ratio (S/T) Dry Bulb		
	cfm	kBtuh	kW	75°F	80°F	85°F	kBtuh	kW	75°F	80°F	85°F	kBtuh	kW	75°F	80°F	85°F	kBtuh	kW	75°F	80°F	85°F
63°F	1920	68.6	4.06	0.73	0.88	1	64.9	4.58	0.75	0.9	1	60.9	5.17	0.77	0.93	1	56.7	5.85	0.79	0.96	1
	2400	72.2	4.09	0.79	0.96	1	68.1	4.61	0.81	0.99	1	63.9	5.2	0.83	1	1	60	5.88	0.86	1	1
	2880	75.2	4.12	0.85	1	1	71.6	4.64	0.87	1	1	67.6	5.24	0.9	1	1	63.4	5.92	0.94	1	1
67°F	1920	73	4.1	0.57	0.71	0.85	69	4.62	0.58	0.73	0.87	64.9	5.21	0.59	0.75	0.89	60.4	5.88	0.6	0.77	0.93
	2400	76.7	4.13	0.62	0.77	0.93	72.4	4.65	0.62	0.79	0.95	67.9	5.24	0.63	0.81	0.98	63	5.91	0.64	0.84	1
	2880	79.1	4.16	0.64	0.83	0.99	74.8	4.68	0.66	0.85	1	69.9	5.26	0.67	0.87	1	65	5.93	0.69	0.91	1
71°F	1920	77.6	4.14	0.44	0.56	0.69	73.5	4.66	0.43	0.57	0.7	69.1	5.26	0.44	0.58	0.72	64.2	5.93	0.43	0.59	0.74
	2400	81.1	4.18	0.45	0.6	0.75	76.8	4.7	0.45	0.61	0.77	72	5.29	0.45	0.62	0.79	67.1	5.96	0.44	0.64	0.81
	2880	83.7	4.21	0.47	0.64	0.8	79.3	4.73	0.46	0.65	0.83	74.2	5.31	0.47	0.66	0.85	69.2	5.98	0.48	0.68	0.89

NOTE − For Temperatures and Capacities not shown in tables, see bulletin − Cooling Unit Rating Table Correction Factor Data in Miscellaneous Engineering Data section.

6 TON - STANDARD EFFICIENCY KGB074S4T (1ST STAGE)

Entering Wet Bulb Temperature	Total Air Volume	Outdoor Air Temperature Entering Outdoor Coil																			
		65°F					75°F					85°F					95°F				
		Total Cool Cap.	Comp. Motor Input	Sensible To Total Ratio (S/T) Dry Bulb			Total Cool Cap.	Comp. Motor Input	Sensible To Total Ratio (S/T) Dry Bulb			Total Cool Cap.	Comp. Motor Input	Sensible To Total Ratio (S/T) Dry Bulb			Total Cool Cap.	Comp. Motor Input	Sensible To Total Ratio (S/T) Dry Bulb		
	cfm	kBtuh	kW	75°F	80°F	85°F	kBtuh	kW	75°F	80°F	85°F	kBtuh	kW	75°F	80°F	85°F	kBtuh	kW	75°F	80°F	85°F
63°F	1200	53.3	2.3	0.68	0.81	0.92	51	2.62	0.69	0.82	0.94	48.3	2.99	0.7	0.83	0.96	45.6	3.41	0.71	0.85	0.98
	1600	57.8	2.29	0.74	0.88	1	55.2	2.61	0.75	0.9	1	52.5	2.98	0.77	0.92	1	49.3	3.4	0.78	0.95	1
	2000	61.2	2.28	0.8	0.96	1	58.2	2.6	0.81	0.98	1	55.3	2.98	0.83	1	1	52.5	3.4	0.84	1	1
67°F	1200	57.2	2.29	0.55	0.66	0.77	54.7	2.62	0.55	0.67	0.78	51.9	2.98	0.55	0.67	0.79	48.9	3.4	0.55	0.68	0.81
	1600	61.9	2.28	0.58	0.72	0.85	59.2	2.6	0.59	0.73	0.86	56.3	2.97	0.59	0.74	0.88	53	3.4	0.6	0.76	0.91
	2000	65.4	2.27	0.62	0.78	0.93	62.3	2.59	0.62	0.78	0.94	59.1	2.96	0.63	0.8	0.97	55.6	3.39	0.64	0.82	0.99
71°F	1200	61.2	2.28	0.42	0.53	0.63	58.6	2.61	0.42	0.53	0.64	55.8	2.97	0.42	0.53	0.64	52.6	3.4	0.41	0.53	0.65
	1600	66.3	2.26	0.44	0.57	0.69	63.3	2.59	0.44	0.57	0.7	60.2	2.96	0.44	0.58	0.71	56.7	3.39	0.44	0.59	0.73
	2000	69.6	2.25	0.46	0.61	0.75	66.5	2.58	0.46	0.61	0.76	63.1	2.95	0.45	0.61	0.77	59.6	3.38	0.46	0.63	0.8

6 TON - STANDARD EFFICIENCY KGB074S4T (2ND STAGE)

Entering Wet Bulb Temperature	Total Air Volume	Outdoor Air Temperature Entering Outdoor Coil																			
		85°F					95°F					105°F					115°F				
		Total Cool Cap.	Comp. Motor Input	Sensible To Total Ratio (S/T) Dry Bulb			Total Cool Cap.	Comp. Motor Input	Sensible To Total Ratio (S/T) Dry Bulb			Total Cool Cap.	Comp. Motor Input	Sensible To Total Ratio (S/T) Dry Bulb			Total Cool Cap.	Comp. Motor Input	Sensible To Total Ratio (S/T) Dry Bulb		
	cfm	kBtuh	kW	75°F	80°F	85°F	kBtuh	kW	75°F	80°F	85°F	kBtuh	kW	75°F	80°F	85°F	kBtuh	kW	75°F	80°F	85°F
63°F	1920	68.6	4.18	0.73	0.88	1	64.9	4.71	0.75	0.9	1	60.9	5.32	0.77	0.93	1	56.8	6.02	0.79	0.96	1
	2400	72.2	4.21	0.79	0.96	1	68.1	4.74	0.81	0.99	1	63.8	5.35	0.83	1	1	60	6.05	0.86	1	1
	2880	75.2	4.24	0.85	1	1	71.6	4.78	0.87	1	1	67.6	5.39	0.9	1	1	63.4	6.09	0.94	1	1
67°F	1920	73	4.22	0.58	0.71	0.85	69	4.75	0.58	0.73	0.87	64.8	5.36	0.59	0.74	0.89	60.4	6.05	0.6	0.77	0.93
	2400	76.7	4.25	0.62	0.77	0.93	72.4	4.79	0.62	0.79	0.95	67.9	5.4	0.63	0.81	0.98	63	6.08	0.65	0.84	1
	2880	79.1	4.28	0.64	0.83	0.99	74.8	4.82	0.66	0.85	1	69.9	5.42	0.67	0.88	1	65	6.1	0.69	0.91	1
71°F	1920	77.6	4.26	0.44	0.56	0.69	73.5	4.8	0.43	0.57	0.7	69.1	5.41	0.43	0.58	0.72	64.2	6.1	0.43	0.59	0.74
	2400	81.1	4.3	0.45	0.6	0.75	76.8	4.84	0.45	0.61	0.77	72	5.45	0.45	0.62	0.79	67.1	6.13	0.45	0.64	0.81
	2880	83.7	4.33	0.47	0.64	0.8	79.2	4.87	0.46	0.65	0.83	74.2	5.47	0.48	0.66	0.85	69.2	6.15	0.48	0.68	0.89

6 TON - HIGH EFFICIENCY KGB074H4T (1ST STAGE)

Entering Wet Bulb Temperature	Total Air Volume	Outdoor Air Temperature Entering Outdoor Coil																			
		65°F					75°F					85°F					95°F				
		Total Cool Cap.	Comp. Motor Input	Sensible To Total Ratio (S/T) Dry Bulb			Total Cool Cap.	Comp. Motor Input	Sensible To Total Ratio (S/T) Dry Bulb			Total Cool Cap.	Comp. Motor Input	Sensible To Total Ratio (S/T) Dry Bulb			Total Cool Cap.	Comp. Motor Input	Sensible To Total Ratio (S/T) Dry Bulb		
	cfm	kBtuh	kW	75°F	80°F	85°F	kBtuh	kW	75°F	80°F	85°F	kBtuh	kW	75°F	80°F	85°F	kBtuh	kW	75°F	80°F	85°F
63°F	1200	53.3	2.27	0.68	0.81	0.92	51	2.59	0.69	0.82	0.94	48.3	2.95	0.7	0.83	0.96	45.6	3.36	0.71	0.85	0.98
	1600	57.8	2.26	0.74	0.88	1	55.2	2.58	0.75	0.9	1	52.5	2.94	0.77	0.92	1	49.3	3.36	0.78	0.95	1
	2000	61.2	2.25	0.8	0.96	1	58.2	2.57	0.81	0.98	1	55.3	2.94	0.83	1	1	52.5	3.35	0.84	1	1
67°F	1200	57.2	2.26	0.55	0.66	0.77	54.7	2.58	0.55	0.67	0.78	51.9	2.94	0.55	0.67	0.79	48.9	3.36	0.55	0.68	0.81
	1600	61.9	2.25	0.58	0.72	0.85	59.2	2.57	0.59	0.73	0.86	56.3	2.93	0.59	0.74	0.88	53	3.35	0.6	0.76	0.91
	2000	65.4	2.24	0.62	0.78	0.93	62.3	2.56	0.62	0.78	0.94	59.2	2.93	0.63	0.8	0.97	55.6	3.34	0.64	0.82	0.99
71°F	1200	61.2	2.25	0.43	0.53	0.63	58.6	2.57	0.42	0.53	0.64	55.8	2.93	0.42	0.53	0.64	52.6	3.35	0.41	0.53	0.65
	1600	66.3	2.23	0.44	0.57	0.69	63.3	2.56	0.44	0.57	0.7	60.2	2.92	0.44	0.58	0.71	56.7	3.34	0.44	0.59	0.73
	2000	69.6	2.22	0.45	0.61	0.75	66.5	2.54	0.46	0.61	0.76	63.1	2.91	0.45	0.62	0.77	59.6	3.33	0.46	0.63	0.8

6 TON - HIGH EFFICIENCY KGB074H4T (2ND STAGE)

Entering Wet Bulb Temperature	Total Air Volume	Outdoor Air Temperature Entering Outdoor Coil																			
		85°F					95°F					105°F					115°F				
		Total Cool Cap.	Comp. Motor Input	Sensible To Total Ratio (S/T) Dry Bulb			Total Cool Cap.	Comp. Motor Input	Sensible To Total Ratio (S/T) Dry Bulb			Total Cool Cap.	Comp. Motor Input	Sensible To Total Ratio (S/T) Dry Bulb			Total Cool Cap.	Comp. Motor Input	Sensible To Total Ratio (S/T) Dry Bulb		
	cfm	kBtuh	kW	75°F	80°F	85°F	kBtuh	kW	75°F	80°F	85°F	kBtuh	kW	75°F	80°F	85°F	kBtuh	kW	75°F	80°F	85°F
63°F	1920	68.6	4.12	0.73	0.88	1	64.9	4.65	0.75	0.9	1	60.9	5.25	0.77	0.93	1	56.6	5.94	0.79	0.96	1
	2400	72.2	4.16	0.79	0.96	1	68.1	4.68	0.81	0.99	1	63.9	5.28	0.83	1	1	60	5.97	0.86	1	1
	2880	75.2	4.18	0.85	1	1	71.6	4.72	0.87	1	1	67.6	5.32	0.9	1	1	63.4	6.01	0.94	1	1
67°F	1920	73	4.16	0.57	0.71	0.85	69	4.69	0.59	0.73	0.87	64.8	5.29	0.59	0.74	0.89	60.4	5.97	0.6	0.77	0.93
	2400	76.7	4.2	0.62	0.77	0.93	72.4	4.73	0.62	0.79	0.95	67.9	5.32	0.63	0.81	0.98	63	6	0.64	0.84	1
	2880	79.1	4.22	0.64	0.83	0.99	74.8	4.75	0.66	0.85	1	69.9	5.34	0.67	0.88	1	65	6.02	0.69	0.91	1
71°F	1920	77.6	4.21	0.44	0.56	0.69	73.5	4.74	0.43	0.57	0.7	69.1	5.34	0.43	0.58	0.72	64.2	6.02	0.43	0.59	0.74
	2400	81.1	4.24	0.45	0.6	0.75	76.8	4.77	0.45	0.61	0.77	72	5.37	0.45	0.62	0.79	67.1	6.05	0.44	0.64	0.81
	2880	83.7	4.27	0.47	0.64	0.8	79.3	4.8	0.46	0.65	0.83	74.2	5.4	0.48	0.66	0.85	69.2	6.07	0.48	0.68	0.89

RATINGS

NOTE − For Temperatures and Capacities not shown in tables, see bulletin − Cooling Unit Rating Table Correction Factor Data in Miscellaneous Engineering Data section.

7.5 TON - STANDARD EFFICIENCY KGB090S4B (1ST STAGE)

Entering Wet Bulb Temperature	Total Air Volume	Outdoor Air Temperature Entering Outdoor Coil																			
		65°F					75°F					85°F					95°F				
		Total Cool Cap.	Comp. Motor Input	Sensible To Total Ratio (S/T) Dry Bulb			Total Cool Cap.	Comp. Motor Input	Sensible To Total Ratio (S/T) Dry Bulb			Total Cool Cap.	Comp. Motor Input	Sensible To Total Ratio (S/T) Dry Bulb			Total Cool Cap.	Comp. Motor Input	Sensible To Total Ratio (S/T) Dry Bulb		
	cfm	kBtuh	kW	75°F	80°F	85°F	kBtuh	kW	75°F	80°F	85°F	kBtuh	kW	75°F	80°F	85°F	kBtuh	kW	75°F	80°F	85°F
63°F	2400	76.1	2.67	0.75	0.94	1	71.6	3.13	0.76	0.97	1	66.5	3.63	0.77	0.99	1	62	4.18	0.79	1	1
	3000	80.9	2.67	0.81	1	1	76.5	3.12	0.83	1	1	72	3.63	0.85	1	1	67.1	4.18	0.9	1	1
	3600	85.6	2.67	0.89	1	1	80.9	3.12	0.93	1	1	76	3.63	0.96	1	1	70.9	4.18	1	1	1
67°F	2400	81.8	2.67	0.58	0.73	0.88	76.7	3.12	0.58	0.74	0.91	71.6	3.63	0.58	0.75	0.95	66.3	4.18	0.59	0.77	0.98
	3000	85.6	2.67	0.6	0.79	0.99	80.3	3.12	0.62	0.81	1	74.9	3.63	0.63	0.83	1	69.3	4.17	0.64	0.85	1
	3600	88.5	2.67	0.66	0.86	1	83.1	3.12	0.66	0.89	1	77.3	3.62	0.68	0.93	1	71.7	4.18	0.69	0.97	1
71°F	2400	87.6	2.67	0.43	0.57	0.7	82.2	3.12	0.42	0.57	0.72	76.8	3.62	0.42	0.57	0.73	71.2	4.18	0.41	0.58	0.74
	3000	91.3	2.66	0.44	0.61	0.77	85.9	3.12	0.45	0.62	0.79	80.3	3.62	0.45	0.62	0.8	74.5	4.17	0.43	0.63	0.83
	3600	94.5	2.67	0.46	0.65	0.83	88.8	3.12	0.46	0.66	0.85	82.9	3.62	0.45	0.67	0.89	76.7	4.18	0.46	0.69	0.94

7.5 TON - STANDARD EFFICIENCY KGB090S4B (2ND STAGE)

Entering Wet Bulb Temperature	Total Air Volume	Outdoor Air Temperature Entering Outdoor Coil																			
		85°F					95°F					105°F					115°F				
		Total Cool Cap.	Comp. Motor Input	Sensible To Total Ratio (S/T) Dry Bulb			Total Cool Cap.	Comp. Motor Input	Sensible To Total Ratio (S/T) Dry Bulb			Total Cool Cap.	Comp. Motor Input	Sensible To Total Ratio (S/T) Dry Bulb			Total Cool Cap.	Comp. Motor Input	Sensible To Total Ratio (S/T) Dry Bulb		
	cfm	kBtuh	kW	75°F	80°F	85°F	kBtuh	kW	75°F	80°F	85°F	kBtuh	kW	75°F	80°F	85°F	kBtuh	kW	75°F	80°F	85°F
63°F	2400	91.7	6.09	0.71	0.86	0.99	85.8	6.72	0.72	0.87	1	79.7	7.4	0.73	0.89	1	73.2	8.15	0.74	0.92	1
	3000	96.9	6.2	0.76	0.93	1	90.7	6.84	0.78	0.96	1	84.4	7.52	0.8	0.98	1	77.5	8.27	0.82	1	1
	3600	101.1	6.3	0.82	1	1	94.9	6.93	0.84	1	1	88.7	7.63	0.86	1	1	82.3	8.4	0.89	1	1
67°F	2400	98.2	6.23	0.56	0.69	0.82	92.1	6.86	0.55	0.7	0.84	85.6	7.55	0.55	0.71	0.86	78.9	8.3	0.56	0.73	0.89
	3000	103.3	6.34	0.59	0.74	0.9	97	6.98	0.6	0.76	0.92	90.1	7.67	0.6	0.78	0.95	83	8.43	0.61	0.8	0.98
	3600	107.4	6.43	0.63	0.8	0.97	100.6	7.07	0.63	0.82	0.99	93.6	7.75	0.64	0.84	1	85.7	8.5	0.65	0.87	1
71°F	2400	105.2	6.38	0.42	0.55	0.67	98.8	7.02	0.41	0.55	0.68	92	7.71	0.4	0.55	0.69	84.9	8.47	0.4	0.55	0.7
	3000	110.5	6.5	0.44	0.58	0.72	103.9	7.14	0.43	0.59	0.73	96.6	7.84	0.42	0.59	0.76	89	8.59	0.42	0.6	0.78
	3600	114.4	6.59	0.45	0.62	0.78	107.3	7.23	0.45	0.63	0.8	99.8	7.92	0.45	0.63	0.82	91.7	8.67	0.44	0.65	0.85

7.5 TON - STANDARD EFFICIENCY KGB090S4T (1ST STAGE)

Entering Wet Bulb Temperature	Total Air Volume	Outdoor Air Temperature Entering Outdoor Coil																			
		65°F					75°F					85°F					95°F				
		Total Cool Cap.	Comp. Motor Input	Sensible To Total Ratio (S/T) Dry Bulb			Total Cool Cap.	Comp. Motor Input	Sensible To Total Ratio (S/T) Dry Bulb			Total Cool Cap.	Comp. Motor Input	Sensible To Total Ratio (S/T) Dry Bulb			Total Cool Cap.	Comp. Motor Input	Sensible To Total Ratio (S/T) Dry Bulb		
	cfm	kBtuh	kW	75°F	80°F	85°F	kBtuh	kW	75°F	80°F	85°F	kBtuh	kW	75°F	80°F	85°F	kBtuh	kW	75°F	80°F	85°F
63°F	1600	68	2.72	0.7	0.83	0.96	63.6	3.18	0.7	0.84	0.98	59.1	3.69	0.71	0.86	1	54.4	4.25	0.72	0.89	1
	2000	72.4	2.72	0.75	0.9	1	67.8	3.18	0.76	0.92	1	63.1	3.69	0.77	0.95	1	57.9	4.25	0.79	0.97	1
	2400	75.8	2.71	0.8	0.97	1	71	3.18	0.81	0.99	1	66.2	3.69	0.83	1	1	61.6	4.25	0.85	1	1
67°F	1600	73.2	2.71	0.55	0.67	0.8	68.6	3.17	0.55	0.68	0.81	63.8	3.69	0.54	0.68	0.82	59	4.25	0.55	0.7	0.84
	2000	77.8	2.71	0.58	0.73	0.86	73	3.18	0.59	0.74	0.88	68	3.69	0.59	0.75	0.91	62.7	4.25	0.59	0.77	0.94
	2400	81.5	2.71	0.62	0.78	0.93	76.2	3.18	0.62	0.79	0.96	70.9	3.69	0.62	0.81	0.98	65.3	4.25	0.63	0.83	1
71°F	1600	78.9	2.71	0.43	0.54	0.65	74	3.18	0.41	0.54	0.66	69.2	3.69	0.41	0.53	0.66	63.9	4.25	0.39	0.54	0.67
	2000	83.7	2.71	0.44	0.57	0.7	78.6	3.18	0.43	0.58	0.71	73.2	3.69	0.42	0.58	0.73	67.6	4.26	0.41	0.58	0.74
	2400	87.2	2.71	0.46	0.61	0.75	81.7	3.18	0.45	0.61	0.77	76.2	3.69	0.44	0.62	0.78	70.4	4.26	0.44	0.62	0.8

7.5 TON - STANDARD EFFICIENCY KGB090S4T (2ND STAGE)

Entering Wet Bulb Temperature	Total Air Volume	Outdoor Air Temperature Entering Outdoor Coil																			
		85°F					95°F					105°F					115°F				
		Total Cool Cap.	Comp. Motor Input	Sensible To Total Ratio (S/T) Dry Bulb			Total Cool Cap.	Comp. Motor Input	Sensible To Total Ratio (S/T) Dry Bulb			Total Cool Cap.	Comp. Motor Input	Sensible To Total Ratio (S/T) Dry Bulb			Total Cool Cap.	Comp. Motor Input	Sensible To Total Ratio (S/T) Dry Bulb		
	cfm	kBtuh	kW	75°F	80°F	85°F	kBtuh	kW	75°F	80°F	85°F	kBtuh	kW	75°F	80°F	85°F	kBtuh	kW	75°F	80°F	85°F
63°F	2400	91.7	6.09	0.71	0.86	0.99	85.8	6.72	0.72	0.87	1	79.7	7.4	0.73	0.89	1	73.2	8.15	0.74	0.92	1
	3000	96.9	6.2	0.76	0.93	1	90.7	6.84	0.78	0.96	1	84.4	7.52	0.8	0.98	1	77.5	8.27	0.82	1	1
	3600	101.1	6.3	0.82	1	1	94.9	6.93	0.84	1	1	88.7	7.63	0.86	1	1	82.3	8.4	0.89	1	1
67°F	2400	98.2	6.23	0.56	0.69	0.82	92.1	6.86	0.55	0.7	0.84	85.6	7.55	0.55	0.71	0.86	78.9	8.3	0.56	0.73	0.89
	3000	103.3	6.34	0.59	0.74	0.9	97	6.98	0.6	0.76	0.92	90.1	7.67	0.6	0.78	0.95	83	8.43	0.61	0.8	0.98
	3600	107.4	6.43	0.63	0.8	0.97	100.6	7.07	0.63	0.82	0.99	93.6	7.75	0.64	0.84	1	85.7	8.5	0.65	0.87	1
71°F	2400	105.2	6.38	0.42	0.55	0.67	98.8	7.02	0.41	0.55	0.68	92	7.71	0.4	0.55	0.69	84.9	8.47	0.4	0.55	0.7
	3000	110.5	6.5	0.44	0.58	0.72	103.9	7.14	0.43	0.59	0.73	96.6	7.84	0.42	0.59	0.76	89	8.59	0.42	0.6	0.78
	3600	114.4	6.59	0.45	0.62	0.78	107.3	7.23	0.45	0.63	0.8	99.8	7.92	0.45	0.63	0.82	91.7	8.67	0.44	0.65	0.85

2 TON STANDARD EFFICIENCY KGB024S4 WITH DEHUMIDIFICATION OPERATING

Entering Wet Bulb Temperature	Total Air Volume	Outdoor Air Temperature Entering Outdoor Coil																			
		65°F					75°F					85°F					95°F				
		Total Cool Cap.	Comp. Motor Input	Sensible To Total Ratio (S/T) Dry Bulb			Total Cool Cap.	Comp. Motor Input	Sensible To Total Ratio (S/T) Dry Bulb			Total Cool Cap.	Comp. Motor Input	Sensible To Total Ratio (S/T) Dry Bulb			Total Cool Cap.	Comp. Motor Input	Sensible To Total Ratio (S/T) Dry Bulb		
	cfm	kBtuh	kW	75°F	80°F	85°F	kBtuh	kW	75°F	80°F	85°F	kBtuh	kW	75°F	80°F	85°F	kBtuh	kW	75°F	80°F	85°F
63°F	640	18.4	920	.61	.78	.94	15.2	1050	.55	.76	.95	11.8	1200	.46	.74	.97	8.4	1360	.31	.68	.89
	800	19.7	910	.67	.86	1.00	16.0	1040	.62	.85	1.00	12.2	1180	.53	.85	1.00	8.3	1350	.37	.84	.96
	960	21.0	900	.72	.86	.99	16.5	1030	.68	.95	1.00	12.4	1170	.61	.95	1.00	8.2	1340	.48	.99	1.00
67°F	640	20.5	920	.45	.61	.77	17.2	1050	.36	.56	.74	13.9	1200	.27	.49	.71	10.4	1360	.01	.36	.67
	800	21.8	910	.48	.66	.83	18.1	1040	.40	.63	.82	14.3	1180	.27	.56	.81	10.3	1350	.02	.45	.81
	960	22.7	900	.52	.72	.89	18.6	1030	.42	.70	.90	14.5	1170	.29	.63	.93	10.2	1340	.03	.54	.94
71°F	640	22.9	920	.28	.46	.60	19.2	1050	.21	.39	.56	15.8	1200	.06	.29	.50	12.3	1360	-.18	.13	.41
	800	24.0	910	.32	.50	.65	20.3	1040	.22	.43	.62	16.4	1180	.06	.33	.59	12.4	1350	-.22	.16	.50
	960	25.1	900	.34	.53	.71	21.0	1030	.23	.47	.69	16.7	1170	.06	.37	.66	12.3	1340	-.25	.19	.57

2.5 TON STANDARD EFFICIENCY KGB030S4 WITH DEHUMIDIFICATION OPERATING

Entering Wet Bulb Temperature	Total Air Volume	Outdoor Air Temperature Entering Outdoor Coil																			
		65°F					75°F					85°F					95°F				
		Total Cool Cap.	Comp. Motor Input	Sensible To Total Ratio (S/T) Dry Bulb			Total Cool Cap.	Comp. Motor Input	Sensible To Total Ratio (S/T) Dry Bulb			Total Cool Cap.	Comp. Motor Input	Sensible To Total Ratio (S/T) Dry Bulb			Total Cool Cap.	Comp. Motor Input	Sensible To Total Ratio (S/T) Dry Bulb		
	cfm	kBtuh	kW	75°F	80°F	85°F	kBtuh	kW	75°F	80°F	85°F	kBtuh	kW	75°F	80°F	85°F	kBtuh	kW	75°F	80°F	85°F
63°F	800	21.0	1170	.56	.73	.88	17.5	1330	.50	.69	.86	13.5	1510	.44	.69	.89	9.8	1710	.21	.59	.87
	1000	22.3	1170	.60	.80	.96	18.5	1330	.56	.77	.96	14.4	1510	.45	.71	.90	10.0	1700	.23	.61	.86
	1200	23.4	1170	.65	.86	.99	19.0	1330	.61	.86	.99	14.9	1500	.46	.73	1.00	10.1	1700	.20	.62	.98
67°F	800	23.3	1180	.41	.57	.71	19.8	1340	.34	.51	.68	16.0	1510	.21	.45	.64	12.1	1710	.03	.31	.59
	1000	24.8	1180	.42	.61	.78	20.8	1330	.35	.57	.76	16.8	1500	.24	.49	.74	12.1	1700	-.01	.36	.62
	1200	25.9	1180	.47	.66	.80	21.6	1330	.39	.61	.83	16.8	1500	.25	.56	.83	11.9	1690	-.03	.46	.65
71°F	800	26.1	1180	.30	.42	.56	22.7	1340	.21	.35	.51	18.8	1510	.05	.26	.45	14.7	1700	-.13	.13	.34
	1000	27.5	1180	.27	.45	.62	23.5	1340	.19	.39	.57	19.3	1510	.05	.29	.52	14.6	1700	-.20	.14	.41
	1200	28.4	1180	.28	.49	.66	24.1	1340	.19	.41	.62	19.5	1500	.04	.32	.58	14.5	1680	-.23	.18	.50

3 TON STANDARD EFFICIENCY KGB036S4 WITH DEHUMIDIFICATION OPERATING

Entering Wet Bulb Temperature	Total Air Volume	Outdoor Air Temperature Entering Outdoor Coil																			
		65°F					75°F					85°F					95°F				
		Total Cool Cap.	Comp. Motor Input	Sensible To Total Ratio (S/T) Dry Bulb			Total Cool Cap.	Comp. Motor Input	Sensible To Total Ratio (S/T) Dry Bulb			Total Cool Cap.	Comp. Motor Input	Sensible To Total Ratio (S/T) Dry Bulb			Total Cool Cap.	Comp. Motor Input	Sensible To Total Ratio (S/T) Dry Bulb		
	cfm	kBtuh	kW	75°F	80°F	85°F	kBtuh	kW	75°F	80°F	85°F	kBtuh	kW	75°F	80°F	85°F	kBtuh	kW	75°F	80°F	85°F
63°F	960	23.7	1530	.58	.76	.94	20.4	1720	.54	.75	.95	16.7	1940	.48	.74	.98	12.7	2190	.35	.71	1.00
	1200	24.8	1540	.64	.85	.99	21.0	1730	.61	.85	.91	16.9	1930	.56	.87	1.00	12.5	2180	.47	.88	1.00
	1440	25.6	1550	.70	.94	1.00	21.5	1730	.68	.96	.96	17.1	1930	.64	1.00	1.00	12.6	2170	.58	.97	1.00
67°F	960	26.4	1550	.41	.57	.73	23.0	1740	.36	.54	.71	19.4	1950	.27	.49	.70	15.6	2190	.13	.41	.68
	1200	27.7	1560	.44	.63	.81	23.9	1750	.39	.60	.82	19.8	1950	.30	.56	.74	15.4	2190	.16	.50	.83
	1440	28.5	1570	.47	.69	.91	24.4	1750	.42	.67	.91	19.9	1950	.33	.64	.95	15.1	2180	.18	.59	.98
71°F	960	29.0	1570	.27	.41	.56	25.7	1760	.20	.37	.53	22.0	1970	.11	.30	.49	18.2	2200	-.03	.20	.43
	1200	30.6	1590	.28	.44	.61	26.7	1770	.20	.40	.59	22.6	1970	.10	.34	.56	18.3	2200	-.05	.24	.51
	1440	31.5	1600	.29	.49	.67	27.3	1780	.21	.44	.66	22.9	1970	.10	.37	.63	18.2	2200	-.08	.27	.60

4 TON STANDARD EFFICIENCY KGB048S4 WITH DEHUMIDIFICATION OPERATING

Entering Wet Bulb Temperature	Total Air Volume	Outdoor Air Temperature Entering Outdoor Coil																			
		65°F					75°F					85°F					95°F				
		Total Cool Cap.	Comp. Motor Input	Sensible To Total Ratio (S/T) Dry Bulb			Total Cool Cap.	Comp. Motor Input	Sensible To Total Ratio (S/T) Dry Bulb			Total Cool Cap.	Comp. Motor Input	Sensible To Total Ratio (S/T) Dry Bulb			Total Cool Cap.	Comp. Motor Input	Sensible To Total Ratio (S/T) Dry Bulb		
	cfm	kBtuh	kW	75°F	80°F	85°F	kBtuh	kW	75°F	80°F	85°F	kBtuh	kW	75°F	80°F	85°F	kBtuh	kW	75°F	80°F	85°F
63°F	1280	35.7	2160	.58	.77	.93	29.5	2440	.54	.76	.98	23.3	2730	.46	.74	.98	17.3	3060	.32	.71	1.00
	1600	37.4	2160	.65	.85	1.00	30.7	2430	.62	.84	1.00	23.9	2730	.52	.85	1.00	17.3	3040	.42	.84	1.00
	1920	38.7	2160	.70	.91	1.00	31.5	2430	.65	.92	1.00	24.0	2720	.66	.96	.94	17.0	3030	.44	1.00	1.00
67°F	1280	39.4	2180	.41	.58	.73	33.0	2460	.34	.54	.73	26.8	2760	.22	.48	.71	20.7	3090	.02	.37	.68
	1600	41.1	2180	.45	.64	.82	34.2	2460	.37	.61	.82	27.3	2750	.29	.57	.81	20.7	3080	.02	.44	.82
	1920	42.1	2170	.42	.71	.89	34.6	2450	.40	.69	.90	27.6	2750	.25	.61	.93	20.3	3060	.01	.55	.96
71°F	1280	42.8	2200	.26	.43	.57	36.4	2480	.17	.36	.54	30.1	2790	.02	.27	.48	23.8	3120	-.19	.12	.41
	1600	44.6	2200	.28	.45	.63	37.5	2480	.18	.40	.60	30.6	2780	.07	.31	.57	23.7	3110	-.24	.14	.52
	1920	45.7	2190	.26	.49	.69	38.1	2480	.18	.43	.65	30.5	2770	.12	.37	.62	23.6	3100	-.32	.11	.58

5 TON STANDARD EFFICIENCY KGB060S4 WITH DEHUMIDIFICATION OPERATING

Entering Wet Bulb Temperature	Total Air Volume	Outdoor Air Temperature Entering Outdoor Coil																			
		65°F					75°F					85°F					95°F				
		Total Cool Cap.	Comp. Motor Input	Sensible To Total Ratio (S/T) Dry Bulb			Total Cool Cap.	Comp. Motor Input	Sensible To Total Ratio (S/T) Dry Bulb			Total Cool Cap.	Comp. Motor Input	Sensible To Total Ratio (S/T) Dry Bulb			Total Cool Cap.	Comp. Motor Input	Sensible To Total Ratio (S/T) Dry Bulb		
	cfm	kBtuh	kW	75°F	80°F	85°F	kBtuh	kW	75°F	80°F	85°F	kBtuh	kW	75°F	80°F	85°F	kBtuh	kW	75°F	80°F	85°F
63°F	1600	42.3	2750	.50	.73	.93	35.3	3020	.45	.69	.95	27.9	3340	.33	.64	.97	19.7	3730	.12	.55	.99
	2000	44.2	2770	.60	.83	1.00	35.9	3030	.52	.85	1.00	30.1	3360	.43	.57	1.00	18.9	3720	.22	.76	.99
	2400	45.3	2780	.67	.95	.99	37.0	3040	.59	.93	.98	28.4	3340	.51	.93	.98	18.5	3720	.29	.91	1.00
67°F	1600	47.7	2800	.34	.52	.70	40.4	3060	.25	.46	.66	33.2	3380	.11	.36	.62	25.1	3770	-.12	.22	.55
	2000	49.5	2810	.40	.60	.79	41.8	3080	.28	.52	.78	33.5	3380	.16	.44	.77	24.3	3760	-.15	.31	.74
	2400	50.8	2830	.41	.66	.90	42.3	3080	.30	.59	.89	32.9	3370	.15	.56	.88	23.0	3740	-.19	.43	.88
71°F	1600	54.3	2850	.18	.28	.51	45.7	3110	.10	.28	.45	38.2	3430	-.05	.17	.39	29.9	3810	-.30	.01	.27
	2000	55.3	2860	.16	.38	.56	46.6	3110	.09	.32	.51	38.3	3420	-.07	.21	.46	29.1	3800	-.38	.03	.37
	2400	56.1	2870	.21	.42	.64	46.8	3110	.09	.35	.59	37.7	3420	-.10	.23	.55	28.1	3780	-.48	.03	.48

6 TON STANDARD EFFICIENCY KGB074S4 WITH DEHUMIDIFICATION OPERATING

Entering Wet Bulb Temperature	Total Air Volume	Outdoor Air Temperature Entering Outdoor Coil																			
		65°F					75°F					85°F					95°F				
		Total Cool Cap.	Comp. Motor Input	Sensible To Total Ratio (S/T) Dry Bulb			Total Cool Cap.	Comp. Motor Input	Sensible To Total Ratio (S/T) Dry Bulb			Total Cool Cap.	Comp. Motor Input	Sensible To Total Ratio (S/T) Dry Bulb			Total Cool Cap.	Comp. Motor Input	Sensible To Total Ratio (S/T) Dry Bulb		
	cfm	kBtuh	kW	75°F	80°F	85°F	kBtuh	kW	75°F	80°F	85°F	kBtuh	kW	75°F	80°F	85°F	kBtuh	kW	75°F	80°F	85°F
63°F	1920	43.6	3210	.54	.74	.93	36.3	3520	.47	.73	.95	29.1	3890	.37	.69	.96	21.3	4320	.21	.64	1.00
	2400	45.8	3250	.61	.82	1.00	37.9	3550	.54	.80	1.00	29.1	3890	.43	.87	.88	20.7	4310	.25	.87	.99
	2880	46.5	3270	.63	.95	.99	38.2	3550	.63	.95	.98	29.7	3900	.60	.95	.98	20.6	4310	.31	.97	1.00
67°F	1920	48.8	3280	.34	.52	.70	41.4	3590	.27	.48	.69	34.0	3960	.15	.40	.67	25.9	4400	-.19	.29	.64
	2400	50.7	3310	.37	.57	.81	42.7	3610	.28	.52	.79	34.0	3960	.08	.47	.76	25.5	4390	-.10	.36	.79
	2880	51.4	3320	.39	.65	.91	43.1	3620	.24	.60	.88	33.2	3950	.01	.61	.90	24.9	4380	-.15	.38	.91
71°F	1920	53.6	3330	.19	.35	.51	46.3	3650	.09	.28	.47	38.4	4030	-.04	.19	.40	30.2	4470	-.29	.05	.33
	2400	55.0	3360	.22	.38	.57	46.8	3660	.09	.31	.54	38.1	4020	-.07	.22	.47	29.1	4450	-.37	.06	.41
	2880	55.7	3370	.25	.41	.64	46.7	3660	.10	.34	.59	37.4	4020	-.10	.23	.55	26.1	4400	-.46	.25	.50

7.5 TON STANDARD EFFICIENCY KGB090S4 WITH DEHUMIDIFICATION OPERATING

Entering Wet Bulb Temperature	Total Air Volume	Outdoor Air Temperature Entering Outdoor Coil																			
		65°F					75°F					85°F					95°F				
		Total Cool Cap.	Comp. Motor Input	Sensible To Total Ratio (S/T) Dry Bulb			Total Cool Cap.	Comp. Motor Input	Sensible To Total Ratio (S/T) Dry Bulb			Total Cool Cap.	Comp. Motor Input	Sensible To Total Ratio (S/T) Dry Bulb			Total Cool Cap.	Comp. Motor Input	Sensible To Total Ratio (S/T) Dry Bulb		
	cfm	kBtuh	kW	75°F	80°F	85°F	kBtuh	kW	75°F	80°F	85°F	kBtuh	kW	75°F	80°F	85°F	kBtuh	kW	75°F	80°F	85°F
63°F	2400	53.6	4850	.49	.69	.90	44.1	5230	.45	.69	.91	35.4	5670	.38	.63	.93	25.9	6160	.07	.55	.90
	3000	55.7	4930	.55	.76	1.00	45.6	5300	.44	.77	1.00	36.3	5730	.32	.68	1.00	25.1	6170	.10	.66	.99
	3600	56.9	4980	.58	.81	1.00	45.9	5320	.36	.83	1.00	35.9	5740	.37	.74	.83	24.0	6170	.07	.76	.93
67°F	2400	58.2	4950	.34	.53	.69	49.3	5340	.24	.45	.65	39.3	5750	.08	.40	.61	30.6	6240	-.19	.16	.53
	3000	59.4	5000	.36	.58	.73	50.0	5370	.27	.47	.73	39.2	5780	.09	.44	.75	27.9	6210	-.26	.31	.67
	3600	61.0	5020	.38	.53	.75	49.2	5370	.21	.56	.72	38.1	5770	.06	.48	.67	27.2	6210	-.36	.25	.77
71°F	2400	62.9	5030	.19	.34	.50	53.5	5420	.06	.27	.45	43.9	5860	-.11	.17	.40	33.7	6320	-.43	-.03	.25
	3000	63.6	5070	.18	.38	.52	52.9	5410	.08	.30	.54	42.6	5840	-.12	.17	.42	31.3	6290	-.50	-.06	.33
	3600	63.4	5060	.19	.38	.58	52.6	5420	.07	.31	.47	40.2	5800	-.15	.28	.48	30.6	6280	-.60	-.09	.35

2 TON - KGB024S4E | 2.5 TON - KGB030S4E

BLOWER TABLE INCLUDES RESISTANCE FOR BASE UNIT ONLY WITH DRY INDOOR COIL AND AIR FILTERS IN PLACE.

FOR ALL UNITS ADD:
1 - Any factory installed options air resistance (heat section, economizer, etc.).
2 - Any field installed accessories air resistance (duct resistance, diffuser, etc.).

See for wet coil and options/accessory air resistance data.

DOWNFLOW

External Static Press. in. w.g.	Air Volume (cfm) at Various Blower Speeds					
	Blower Only	Low Speed		High Speed		Free Cooling
	Low and High Speed: G (Pin 1)	Cooling: Y1 (Pin 2 and 5)	1st Stage Heating: W1 (Pin 2) 2nd Stage Heating: W2 (Pin 2 and 4)	1st Stage Heating: W1 (Pin 3) 2nd Stage Heating: W2 (Pin 3 and 4)	Cooling: Y1 (Pin 3 and 5)	Low and High Speed: Y1 (Pin 1 and 5)
0	488	985	1127	1353	1127	1127
0.1	421	913	1082	1311	1082	1082
0.2	333	841	1037	1269	1037	1037
0.3	285	754	988	1224	988	988
0.4	215	668	923	1180	923	923
0.5	- - -	611	858	1135	858	858
0.6	- - -	553	809	1076	809	809
0.7	- - -	481	760	1017	760	760
0.8	- - -	- - -	694	972	694	694
0.9	- - -	- - -	646	928	646	646
1.0	- - -	- - -	580	869	580	580

HORIZONTAL

External Static Press. in. w.g.	Air Volume (cfm) at Various Blower Speeds					
	Blower Only	Low Speed		High Speed		Free Cooling
	Low and High Speed: G (Pin 1)	Cooling: Y1 (Pin 2 and 5)	1st Stage Heating: W1 (Pin 2) 2nd Stage Heating: W2 (Pin 2 and 4)	1st Stage Heating: W1 (Pin 3) 2nd Stage Heating: W2 (Pin 3 and 4)	Cooling: Y1 (Pin 3 and 5)	Low and High Speed: Y1 (Pin 1 and 5)
0	479	965	1104	1326	1104	1104
0.1	412	895	1060	1285	1060	1060
0.2	326	824	1016	1244	1016	1016
0.3	280	739	968	1200	968	968
0.4	211	655	905	1156	905	905
0.5	- - -	599	841	1112	841	841
0.6	- - -	542	793	1054	793	793
0.7	- - -	471	745	997	745	745
0.8	- - -	- - -	680	953	680	680
0.9	- - -	- - -	633	909	633	633
1.0	- - -	- - -	568	852	568	568

3 TON - KGB036S4E

BLOWER TABLE INCLUDES RESISTANCE FOR BASE UNIT ONLY WITH DRY INDOOR COIL AND AIR FILTERS IN PLACE.

FOR ALL UNITS ADD:
1 - Any factory installed options air resistance (heat section, economizer, etc.).
2 - Any field installed accessories air resistance (duct resistance, diffuser, etc.).

See for wet coil and options/accessory air resistance data.

DOWNFLOW

External Static Press. in. w.g.	Air Volume (cfm) at Various Blower Speeds						
	Blower Only	Low Speed		High Speed			Free Cooling
	Low and High Speed: G (Pin 1)	1st Stage Heating: W1 (Pin 2) Cooling: Y1 (Pin 2 and 5)	2nd Stage Heating: W2 (Pin 2 and 4)	1st Stage Heating: W1 (Pin 3)	2nd Stage Heating: W2 (Pin 3 and 4)	Cooling: Y1 (Pin 3 and 5)	Low and High Speed: Y1 (Pin 1 and 5)
0	862	1375	1567	1706	1840	1567	1567
0.1	809	1330	1539	1682	1780	1539	1539
0.2	741	1277	1511	1658	1748	1511	1511
0.3	680	1253	1477	1624	1712	1477	1477
0.4	622	1200	1443	1598	1677	1443	1443
0.5	555	1150	1409	1564	1638	1409	1409
0.6	- - -	1095	1364	1530	1608	1364	1364
0.7	- - -	1052	1330	1496	1577	1330	1330
0.8	- - -	1004	1296	1444	1528	1296	1296
0.9	- - -	950	1251	1419	1491	1251	1251
1.0	- - -	900	1206	1394	1455	1206	1206

HORIZONTAL

External Static Press. in. w.g.	Air Volume (cfm) at Various Blower Speeds						
	Blower Only	Low Speed		High Speed			Free Cooling
	Low and High Speed: G (Pin 1)	1st Stage Heating: W1 (Pin 2) Cooling: Y1 (Pin 2 and 5)	2nd Stage Heating: W2 (Pin 2 and 4)	1st Stage Heating: W1 (Pin 3)	2nd Stage Heating: W2 (Pin 3 and 4)	Cooling: Y1 (Pin 3 and 5)	Low and High Speed: Y1 (Pin 1 and 5)
0	479	1379	1536	1672	1810	1536	1536
0.1	412	1305	1508	1648	1749	1508	1508
0.2	326	1264	1481	1625	1718	1481	1481
0.3	280	1216	1447	1592	1677	1447	1447
0.4	211	1173	1414	1566	1649	1414	1414
0.5	- - -	1131	1381	1533	1622	1381	1381
0.6	- - -	1078	1337	1499	1577	1337	1337
0.7	- - -	1038	1303	1466	1544	1303	1303
0.8	- - -	986	1270	1415	1509	1270	1270
0.9	- - -	933	1226	1391	1471	1226	1226
1.0	- - -	885	1182	1366	1438	1182	1182

4 TON - KGB048S4E

BLOWER TABLE INCLUDES RESISTANCE FOR BASE UNIT ONLY WITH DRY INDOOR COIL AND AIR FILTERS IN PLACE.

FOR ALL UNITS ADD:
1 - Any factory installed options air resistance (larger gas heat section, economizer, wet coil, etc.) See page 43.
2 - Any field installed accessories air resistance (duct resistance, diffuser, etc.) See page 43.

DOWNFLOW

External Static Press. in. w.g.	Air Volume (cfm) at Various Blower Speeds					
	Blower Only	Low Speed		High Speed		Free Cooling
	Low and High Speed: G (Pin 1)	Cooling: Y1 (Pin 2 and 5)	1st Stage Heating: W1 (Pin 2) 2nd Stage Heating: W2 (Pin 2 and 4)	2nd Stage Heating: W2 (Pin 3 and 4)	1st Stage Heating: W1 (Pin 3) Cooling: Y1 (Pin 3 and 5)	Low and High Speed: Y1 (Pin 1 and 5)
0	963	1561	1869	2156	1869	1958
0.1	897	1530	1842	2132	1842	1920
0.2	831	1499	1815	2108	1815	1882
0.3	752	1466	1788	2084	1788	1844
0.4	673	1432	1750	2057	1750	1814
0.5	620	1398	1723	2031	1723	1784
0.6	567	1353	1695	1991	1695	1754
0.7	501	1319	1658	1952	1658	1724
0.8	- - -	1274	1621	1899	1621	1694
0.9	- - -	1240	1593	1794	1593	1672
1.0	- - -	1184	1556	1689	1556	1650

HORIZONTAL

External Static Press. in. w.g.	Air Volume (cfm) at Various Blower Speeds					
	Blower Only	Low Speed		High Speed		Free Cooling
	Low and High Speed: G (Pin 1)	Cooling: Y1 (Pin 2 and 5)	1st Stage Heating: W1 (Pin 2) 2nd Stage Heating: W2 (Pin 2 and 4)	2nd Stage Heating: W2 (Pin 3 and 4)	1st Stage Heating: W1 (Pin 3) Cooling: Y1 (Pin 3 and 5)	Low and High Speed: Y1 (Pin 1 and 5)
0	944	1530	1832	2113	1832	1919
0.1	879	1499	1805	2089	1805	1882
0.2	814	1469	1779	2066	1779	1844
0.3	737	1437	1752	2042	1752	1807
0.4	660	1403	1715	2016	1715	1778
0.5	608	1370	1689	1990	1689	1748
0.6	556	1326	1661	1951	1661	1719
0.7	491	1293	1625	1913	1625	1690
0.8	- - -	1249	1589	1861	1589	1660
0.9	- - -	1215	1561	1758	1561	1639
1.0	- - -	1160	1525	1655	1525	1617

5 TON - KGB060S4E

BLOWER TABLE INCLUDES RESISTANCE FOR BASE UNIT ONLY WITH DRY INDOOR COIL AND AIR FILTERS IN PLACE.

FOR ALL UNITS ADD:
1 - Any factory installed options air resistance (larger gas heat section, economizer, wet coil, etc.) See page 43.
2 - Any field installed accessories air resistance (duct resistance, diffuser, etc.) See page 43.

DOWNFLOW

External Static Press. in. w.g.	Air Volume (cfm) at Various Blower Speeds						
	Blower Only	Low Speed		High Speed			Free Cooling
	Low and High Speed: G (Pin 1)	1st Stage Heating: W1 (Pin 2) Cooling: Y1 (Pin 2 and 5)	2nd Stage Heating: W2 (Pin 2 and 4)	1st Stage Heating: W1 (Pin 3)	2nd Stage Heating: W2 (Pin 3 and 4)	Cooling: Y1 (Pin 3 and 5)	Low and High Speed: Y1 (Pin 1 and 5)
0	1088	1801	1982	1801	2339	2287	2287
0.1	1042	1769	1956	1769	2310	2251	2251
0.2	996	1736	1928	1736	2281	2215	2215
0.3	948	1703	1900	1703	2253	2178	2178
0.4	883	1669	1870	1669	2224	2142	2142
0.5	835	1634	1838	1634	2195	2106	2106
0.6	787	1598	1806	1598	2166	2058	2058
0.7	723	1561	1772	1561	2137	2010	2010
0.8	658	1524	1736	1524	2108	1937	1937
0.9	594	1486	1700	1486	2080	1841	1841
1.0	546	1446	1662	1446	2051	1696	1696

HORIZONTAL

External Static Press. in. w.g.	Air Volume (cfm) at Various Blower Speeds						
	Blower Only	Low Speed		High Speed			Free Cooling
	Low and High Speed: G (Pin 1)	1st Stage Heating: W1 (Pin 2) Cooling: Y1 (Pin 2 and 5)	2nd Stage Heating: W2 (Pin 2 and 4)	1st Stage Heating: W1 (Pin 3)	2nd Stage Heating: W2 (Pin 3 and 4)	Cooling: Y1 (Pin 3 and 5)	Low and High Speed: Y1 (Pin 1 and 5)
0	1066	1728	1886	1728	2206	2241	2241
0.1	1021	1708	1872	1708	2189	2206	2206
0.2	976	1685	1859	1685	2174	2171	2171
0.3	929	1661	1832	1661	2157	2134	2134
0.4	865	1636	1814	1636	2135	2099	2099
0.5	818	1608	1796	1608	2118	2064	2064
0.6	771	1579	1770	1579	2102	2017	2017
0.7	709	1548	1743	1548	2080	1970	1970
0.8	645	1516	1716	1516	2058	1898	1898
0.9	582	1481	1689	1481	2036	1804	1804
1.0	535	1445	1654	1445	2020	1662	1662

3 TON - KGB036S4D | 4 TON - KGB048S4D

BLOWER TABLE INCLUDES RESISTANCE FOR BASE UNIT ONLY WITH DRY INDOOR COIL AND AIR FILTERS IN PLACE.

FOR ALL UNITS ADD:
1 - Any factory installed options air resistance (larger gas heat section, economizer, wet coil, etc.) See page 43.
2 - Any field installed accessories air resistance (duct resistance, diffuser, etc.) See page 43.

External Static Pressure (in. w.g.)	Air Volume (cfm) at Various Blower Speeds								
	208 VOLTS			230 VOLTS			460/575 VOLTS		
	High	Medium	Low	High	Medium	Low	High	Medium	Low
3 and 4 Ton Standard Efficiency (Downflow)									**KGB036S and KGB048S**
0.0	1873	1561	1123	2094	1783	1321	2064	1727	1216
0.1	1993	1601	1148	2168	1797	1338	2105	1744	1229
0.2	1913	1601	1137	2098	1803	1308	2050	1694	1198
0.3	1858	1527	1078	2036	1725	1261	1987	1638	1167
0.4	1801	1496	1046	1973	1679	1219	1905	1598	1148
0.5	1763	1467	987	1910	1647	1177	1862	1559	1108
0.6	1709	1414	897	1830	1560	1080	1781	1509	1057
0.7	1617	1368	806	1727	1519	986	1698	1449	982
0.8	1472	1269	730	1604	1419	918	1614	1389	920
0.9	1359	1162	487	1478	1363	706	1488	1346	792
1.0	961	922	370	1093	1083	590	1167	1099	703
3 and 4 Ton Standard Efficiency (Horizontal)									**KGB036S and KGB048S**
0.0	1799	1530	1073	2012	1747	1263	2015	1756	1251
0.1	1868	1544	1088	2032	1733	1268	2071	1760	1279
0.2	1802	1494	1068	1976	1682	1228	2014	1700	1226
0.3	1735	1432	1014	1900	1618	1185	1937	1634	1187
0.4	1666	1397	980	1825	1568	1142	1878	1597	1174
0.5	1615	1350	904	1750	1516	1078	1801	1558	1124
0.6	1564	1305	842	1675	1440	1014	1743	1479	1060
0.7	1462	1228	758	1562	1364	928	1664	1415	982
0.8	1330	1151	670	1449	1287	842	1512	1335	865
0.9	1194	1011	464	1298	1185	671	1393	1297	733
1.0	878	878	355	998	1032	565	1060	1063	618

5 TON - KGB060S4D

BLOWER TABLE INCLUDES RESISTANCE FOR BASE UNIT ONLY WITH DRY INDOOR COIL AND AIR FILTERS IN PLACE.

FOR ALL UNITS ADD:
1 - Any factory installed options air resistance (larger gas heat section, economizer, wet coil, etc.) See page 43.
2 - Any field installed accessories air resistance (duct resistance, diffuser, etc.) See page 43.

External Static Pressure (in. w.g.)	Air Volume (cfm) at Various Blower Speeds					
	208 VOLTS		230 VOLTS		460/575 VOLTS	
	High	Low	High	Low	High	Low
5 Ton Standard Efficiency (Downflow)						**KGB060S**
0.0	1940	1581	2131	1788	2131	1788
0.1	1929	1566	2107	1784	2107	1784
0.2	1906	1552	2074	1774	2074	1774
0.3	1872	1546	2036	1752	2036	1752
0.4	1836	1526	1998	1708	1998	1708
0.5	1802	1486	1960	1679	1960	1679
0.6	1749	1447	1904	1635	1904	1635
0.7	1714	1407	1847	1576	1847	1576
0.8	1644	1347	1771	1518	1771	1518
0.9	1574	1245	1658	1430	1658	1430
1.0	1338	- - -	1506	- - -	1506	- - -
5 Ton Standard Efficiency (Horizontal)						**KGB060S**
0.0	1930	1575	2143	1764	2143	1764
0.1	1920	1573	2115	1761	2115	1761
0.2	1910	1576	2088	1751	2088	1751
0.3	1870	1552	2055	1746	2055	1746
0.4	1840	1524	2023	1704	2023	1704
0.5	1790	1495	1979	1675	1979	1675
0.6	1739	1466	1925	1633	1925	1633
0.7	1679	1428	1860	1590	1860	1590
0.8	1639	1371	1775	1534	1775	1534
0.9	1559	1270	1670	1421	1670	1421
1.0	1438	- - -	1539	1285	1539	1285

3 TON - KGB036S4B

BLOWER TABLE INCLUDES RESISTANCE FOR BASE UNIT ONLY WITH DRY INDOOR COIL AND AIR FILTERS IN PLACE.

FOR ALL UNITS ADD:
1 - Any factory installed options air resistance (heat section, economizer, wet coil, etc.).
2 - Any field installed accessories air resistance (duct resistance, diffuser, etc.).
See page 43 for blower motors and drives and wet coil and options/accessory air resistance data.

DOWNFLOW

Air Volume cfm	External Static - in. w.g.															
	0.10		0.20		0.30		0.40		0.50		0.60		0.70		0.80	
	RPM	BHP	RPM	BHP	RPM	BHP	RPM	BHP	RPM	BHP	RPM	BHP	RPM	BHP	RPM	BHP
900	493	0.11	564	0.15	637	0.19	711	0.22	783	0.24	851	0.26	910	0.29	961	0.32
1000	517	0.14	588	0.18	660	0.22	733	0.24	804	0.26	868	0.29	924	0.32	974	0.35
1100	544	0.17	614	0.21	685	0.25	757	0.27	826	0.29	887	0.32	940	0.36	987	0.38
1200	574	0.2	643	0.24	712	0.28	782	0.31	849	0.33	906	0.36	956	0.39	1001	0.42
1300	613	0.23	679	0.28	745	0.31	811	0.34	873	0.36	926	0.40	973	0.43	1016	0.46
1400	662	0.26	722	0.30	781	0.34	841	0.37	897	0.41	944	0.44	989	0.48	1032	0.51
1500	710	0.29	763	0.33	816	0.38	869	0.41	919	0.45	963	0.49	1006	0.53	1049	0.56

Air Volume cfm	External Static - in. w.g.															
	0.90		1.00		1.10		1.20		1.30		1.40		1.50		1.60	
	RPM	BHP	RPM	BHP	RPM	BHP	RPM	BHP	RPM	BHP	RPM	BHP	RPM	BHP	RPM	BHP
900	1008	0.34	1056	0.36	1104	0.39	1149	0.41	1190	0.44	1229	0.46	1267	0.49	1305	0.52
1000	1020	0.37	1067	0.40	1115	0.42	1159	0.45	1200	0.48	1239	0.51	1277	0.54	1314	0.57
1100	1032	0.41	1078	0.43	1124	0.46	1168	0.49	1210	0.52	1249	0.55	1286	0.58	1323	0.62
1200	1045	0.45	1090	0.47	1135	0.50	1178	0.53	1220	0.57	1259	0.60	1296	0.64	1332	0.67
1300	1060	0.49	1104	0.51	1148	0.55	1190	0.58	1230	0.62	1269	0.65	1306	0.69	1342	0.72
1400	1075	0.53	1119	0.56	1162	0.60	1203	0.63	1242	0.67	1280	0.71	1317	0.75	1352	0.78
1500	1093	0.58	1136	0.61	1177	0.65	1217	0.69	1255	0.73	1292	0.77	1328	0.80	1364	0.84

HORIZONTAL

Air Volume cfm	External Static - in. w.g.															
	0.10		0.20		0.30		0.40		0.50		0.60		0.70		0.80	
	RPM	BHP	RPM	BHP	RPM	BHP	RPM	BHP	RPM	BHP	RPM	BHP	RPM	BHP	RPM	BHP
900	465	0.09	531	0.14	600	0.17	670	0.20	740	0.22	808	0.24	869	0.27	925	0.30
1000	483	0.12	549	0.16	617	0.20	687	0.22	756	0.24	822	0.26	881	0.29	935	0.33
1100	504	0.14	570	0.19	637	0.22	706	0.25	773	0.27	837	0.29	894	0.32	946	0.36
1200	527	0.17	592	0.22	658	0.25	726	0.28	792	0.30	854	0.32	908	0.36	957	0.39
1300	552	0.20	617	0.25	682	0.29	748	0.31	812	0.33	871	0.36	923	0.40	970	0.43
1400	580	0.24	644	0.28	708	0.32	773	0.35	834	0.37	890	0.40	938	0.44	984	0.48
1500	611	0.28	674	0.32	736	0.35	799	0.38	857	0.41	908	0.44	954	0.49	998	0.52

Air Volume cfm	External Static - in. w.g.															
	0.90		1.00		1.10		1.20		1.30		1.40		1.50		1.60	
	RPM	BHP	RPM	BHP	RPM	BHP	RPM	BHP	RPM	BHP	RPM	BHP	RPM	BHP	RPM	BHP
900	977	0.33	1028	0.36	1079	0.39	1127	0.42	1169	0.45	1208	0.48	1246	0.51	1282	0.54
1000	985	0.36	1036	0.39	1087	0.42	1135	0.45	1177	0.48	1216	0.52	1253	0.55	1290	0.58
1100	995	0.39	1044	0.42	1093	0.45	1140	0.49	1183	0.52	1223	0.56	1261	0.59	1297	0.62
1200	1005	0.43	1053	0.46	1100	0.49	1146	0.53	1190	0.56	1230	0.60	1268	0.63	1304	0.67
1300	1016	0.47	1063	0.50	1109	0.53	1154	0.57	1197	0.61	1237	0.64	1275	0.68	1311	0.72
1400	1029	0.51	1074	0.54	1120	0.58	1164	0.61	1205	0.65	1245	0.69	1282	0.73	1318	0.77
1500	1042	0.56	1087	0.59	1132	0.62	1174	0.66	1215	0.71	1253	0.75	1290	0.78	1326	0.82

4 TON - KGB048S4B

BLOWER TABLE INCLUDES RESISTANCE FOR BASE UNIT ONLY WITH DRY INDOOR COIL AND AIR FILTERS IN PLACE.

FOR ALL UNITS ADD:
1 - Any factory installed options air resistance (heat section, economizer, wet coil, etc.).
2 - Any field installed accessories air resistance (duct resistance, diffuser, etc.).
See page 43 for blower motors and drives and wet coil and options/accessory air resistance data.

DOWNFLOW

Air Volume cfm	External Static - in. w.g.															
	0.10		0.20		0.30		0.40		0.50		0.60		0.70		0.80	
	RPM	BHP	RPM	BHP	RPM	BHP	RPM	BHP	RPM	BHP	RPM	BHP	RPM	BHP	RPM	BHP
1200	574	0.20	644	0.24	713	0.28	784	0.31	850	0.33	906	0.36	953	0.39	998	0.42
1300	608	0.24	677	0.28	744	0.31	813	0.34	874	0.37	925	0.40	969	0.43	1014	0.46
1400	645	0.28	712	0.31	778	0.35	842	0.38	898	0.41	944	0.44	986	0.48	1030	0.51
1500	684	0.31	749	0.35	811	0.38	871	0.42	921	0.45	963	0.49	1004	0.53	1048	0.56
1600	723	0.35	785	0.39	844	0.43	898	0.46	943	0.50	983	0.54	1024	0.58	1067	0.61
1700	761	0.40	819	0.44	875	0.48	924	0.52	965	0.56	1004	0.60	1045	0.63	1089	0.66
1800	798	0.45	853	0.49	905	0.54	950	0.58	990	0.62	1028	0.66	1069	0.69	1112	0.72
1900	834	0.51	885	0.55	934	0.60	977	0.64	1015	0.68	1054	0.72	1095	0.75	1137	0.79
2000	869	0.57	917	0.62	962	0.67	1004	0.71	1042	0.75	1081	0.78	1121	0.82	1162	0.86

Air Volume cfm	External Static - in. w.g.															
	0.90		1.00		1.10		1.20		1.30		1.40		1.50		1.60	
	RPM	BHP	RPM	BHP	RPM	BHP	RPM	BHP	RPM	BHP	RPM	BHP	RPM	BHP	RPM	BHP
1200	1043	0.44	1090	0.47	1135	0.50	1179	0.53	1220	0.57	1259	0.60	1297	0.64	1333	0.67
1300	1058	0.49	1104	0.51	1148	0.55	1190	0.58	1231	0.62	1269	0.65	1306	0.69	1342	0.72
1400	1074	0.53	1119	0.56	1162	0.59	1203	0.63	1242	0.67	1280	0.71	1317	0.74	1352	0.78
1500	1092	0.58	1136	0.61	1177	0.65	1217	0.69	1255	0.73	1292	0.76	1328	0.80	1364	0.84
1600	1112	0.63	1154	0.67	1193	0.71	1232	0.75	1269	0.79	1306	0.83	1341	0.87	1377	0.91
1700	1132	0.69	1173	0.73	1211	0.77	1248	0.81	1285	0.86	1321	0.90	1356	0.94	1391	0.98
1800	1154	0.76	1194	0.80	1230	0.85	1266	0.89	1302	0.93	1338	0.98	1373	1.02	1408	1.06
1900	1178	0.83	1215	0.88	1250	0.93	1286	0.98	1321	1.02	1356	1.06	1391	1.10	1426	1.14
2000	1201	0.91	1237	0.97	1271	1.02	1307	1.07	1342	1.11	1376	1.15	1411	1.19	1446	1.23

HORIZONTAL

Air Volume cfm	External Static - in. w.g.															
	0.10		0.20		0.30		0.40		0.50		0.60		0.70		0.80	
	RPM	BHP	RPM	BHP	RPM	BHP	RPM	BHP	RPM	BHP	RPM	BHP	RPM	BHP	RPM	BHP
1200	540	0.18	606	0.22	673	0.26	748	0.29	816	0.30	870	0.33	914	0.37	961	0.40
1300	568	0.21	634	0.26	699	0.29	771	0.32	835	0.34	886	0.37	929	0.41	975	0.44
1400	599	0.25	664	0.29	728	0.33	795	0.35	855	0.38	903	0.41	946	0.45	991	0.49
1500	632	0.29	696	0.33	758	0.36	821	0.39	877	0.42	922	0.46	963	0.50	1008	0.54
1600	667	0.33	729	0.36	789	0.40	848	0.43	898	0.46	941	0.51	982	0.55	1026	0.59
1700	702	0.36	761	0.40	819	0.44	873	0.48	920	0.52	960	0.56	1001	0.61	1044	0.64
1800	737	0.41	794	0.45	848	0.49	898	0.53	941	0.58	981	0.62	1021	0.66	1064	0.70
1900	771	0.46	825	0.50	877	0.54	923	0.59	964	0.64	1002	0.68	1043	0.72	1085	0.76
2000	805	0.51	857	0.56	905	0.61	948	0.66	987	0.71	1025	0.75	1065	0.79	1107	0.82

Air Volume cfm	External Static - in. w.g.															
	0.90		1.00		1.10		1.20		1.30		1.40		1.50		1.60	
	RPM	BHP	RPM	BHP	RPM	BHP	RPM	BHP	RPM	BHP	RPM	BHP	RPM	BHP	RPM	BHP
1200	1010	0.43	1061	0.46	1110	0.50	1156	0.53	1199	0.57	1239	0.61	1276	0.64	1312	0.68
1300	1024	0.47	1073	0.50	1120	0.54	1165	0.58	1207	0.62	1246	0.65	1284	0.69	1320	0.73
1400	1038	0.52	1086	0.55	1131	0.59	1175	0.62	1216	0.66	1255	0.70	1292	0.74	1328	0.78
1500	1054	0.57	1100	0.60	1144	0.64	1186	0.68	1226	0.72	1264	0.75	1301	0.79	1336	0.83
1600	1071	0.62	1116	0.65	1158	0.69	1198	0.73	1237	0.77	1274	0.81	1310	0.85	1345	0.89
1700	1089	0.67	1132	0.71	1172	0.75	1211	0.79	1249	0.83	1285	0.87	1321	0.91	1355	0.95
1800	1108	0.73	1149	0.77	1188	0.81	1225	0.85	1262	0.90	1298	0.94	1332	0.98	1366	1.01
1900	1128	0.79	1167	0.84	1204	0.88	1241	0.92	1276	0.97	1311	1.01	1345	1.05	1379	1.09
2000	1148	0.86	1186	0.91	1221	0.96	1257	1.00	1292	1.05	1326	1.09	1359	1.13	1393	1.17

5 TON - KGB060S4B

BLOWER TABLE INCLUDES RESISTANCE FOR BASE UNIT ONLY WITH DRY INDOOR COIL AND AIR FILTERS IN PLACE.

FOR ALL UNITS ADD:
1 - Any factory installed options air resistance (heat section, economizer, wet coil, etc.).
2 - Any field installed accessories air resistance (duct resistance, diffuser, etc.).
See page 43 for blower motors and drives and wet coil and options/accessory air resistance data.

DOWNFLOW

Air Volume cfm	External Static - in. w.g.															
	0.10		0.20		0.30		0.40		0.50		0.60		0.70		0.80	
	RPM	BHP	RPM	BHP	RPM	BHP	RPM	BHP	RPM	BHP	RPM	BHP	RPM	BHP	RPM	BHP
1600	720	0.28	769	0.33	819	0.37	871	0.41	926	0.44	975	0.47	1016	0.51	1054	0.55
1700	779	0.30	822	0.35	864	0.39	908	0.44	953	0.48	995	0.52	1034	0.57	1072	0.61
1800	828	0.34	864	0.39	901	0.43	938	0.48	977	0.53	1015	0.58	1053	0.63	1091	0.67
1900	858	0.41	892	0.45	927	0.50	962	0.55	999	0.60	1036	0.65	1074	0.69	1112	0.73
2000	879	0.47	913	0.52	948	0.56	984	0.61	1020	0.67	1058	0.72	1096	0.76	1134	0.80
2100	900	0.53	935	0.58	970	0.63	1007	0.69	1044	0.74	1081	0.79	1119	0.84	1157	0.88
2200	922	0.60	958	0.65	994	0.71	1031	0.76	1068	0.82	1106	0.87	1143	0.91	1180	0.95
2300	947	0.67	983	0.73	1020	0.79	1057	0.85	1094	0.90	1131	0.95	1168	1.00	1205	1.03
2400	974	0.76	1010	0.82	1047	0.88	1084	0.94	1120	0.99	1157	1.04	1193	1.08	1230	1.12

Air Volume cfm	External Static - in. w.g.															
	0.90		1.00		1.10		1.20		1.30		1.40		1.50		1.60	
	RPM	BHP	RPM	BHP	RPM	BHP	RPM	BHP	RPM	BHP	RPM	BHP	RPM	BHP	RPM	BHP
1600	1093	0.60	1133	0.63	1173	0.67	1214	0.70	1253	0.73	1288	0.77	1318	0.81	1351	0.85
1700	1111	0.65	1150	0.69	1190	0.72	1230	0.76	1268	0.79	1301	0.83	1331	0.87	1363	0.92
1800	1130	0.71	1169	0.75	1208	0.78	1247	0.82	1285	0.86	1317	0.90	1345	0.94	1377	0.98
1900	1150	0.77	1188	0.81	1227	0.85	1267	0.88	1303	0.92	1333	0.97	1361	1.02	1392	1.06
2000	1172	0.84	1210	0.88	1248	0.92	1286	0.96	1321	1.00	1350	1.05	1377	1.10	1409	1.14
2100	1195	0.91	1233	0.95	1269	1.00	1306	1.04	1339	1.09	1367	1.14	1395	1.19	1426	1.23
2200	1218	0.99	1255	1.03	1290	1.09	1324	1.14	1356	1.19	1385	1.24	1413	1.28	1444	1.32
2300	1242	1.07	1277	1.13	1310	1.20	1343	1.26	1374	1.30	1403	1.34	1432	1.38	1464	1.42
2400	1267	1.16	1300	1.23	1332	1.31	1364	1.37	1394	1.41	1423	1.45	1453	1.48	1484	1.53

HORIZONTAL

Air Volume cfm	External Static - in. w.g.															
	0.10		0.20		0.30		0.40		0.50		0.60		0.70		0.80	
	RPM	BHP	RPM	BHP	RPM	BHP	RPM	BHP	RPM	BHP	RPM	BHP	RPM	BHP	RPM	BHP
1600	654	0.28	712	0.32	769	0.36	825	0.39	879	0.43	933	0.47	982	0.50	1024	0.54
1700	703	0.31	756	0.35	807	0.39	858	0.43	906	0.47	955	0.51	999	0.55	1039	0.59
1800	752	0.34	798	0.38	844	0.43	889	0.48	933	0.52	977	0.57	1017	0.61	1056	0.65
1900	796	0.38	837	0.43	878	0.48	918	0.53	958	0.58	997	0.62	1036	0.67	1074	0.71
2000	833	0.43	870	0.48	907	0.54	943	0.59	980	0.64	1018	0.69	1055	0.73	1093	0.77
2100	864	0.50	897	0.55	931	0.60	966	0.65	1002	0.71	1038	0.76	1075	0.80	1113	0.83
2200	887	0.57	920	0.62	953	0.67	988	0.73	1024	0.78	1060	0.83	1097	0.87	1135	0.90
2300	909	0.64	942	0.70	976	0.75	1011	0.81	1046	0.86	1083	0.91	1120	0.95	1157	0.98
2400	931	0.72	965	0.78	999	0.83	1035	0.89	1071	0.94	1108	0.99	1144	1.03	1181	1.07

Air Volume cfm	External Static - in. w.g.															
	0.90		1.00		1.10		1.20		1.30		1.40		1.50		1.60	
	RPM	BHP	RPM	BHP	RPM	BHP	RPM	BHP	RPM	BHP	RPM	BHP	RPM	BHP	RPM	BHP
1600	1063	0.58	1101	0.61	1141	0.64	1181	0.67	1222	0.70	1261	0.73	1298	0.77	1333	0.81
1700	1078	0.63	1117	0.66	1156	0.69	1196	0.72	1235	0.75	1273	0.79	1309	0.83	1344	0.87
1800	1094	0.68	1133	0.72	1172	0.75	1211	0.78	1250	0.81	1287	0.85	1322	0.90	1355	0.94
1900	1112	0.74	1151	0.77	1190	0.81	1228	0.84	1265	0.88	1301	0.92	1335	0.97	1367	1.01
2000	1131	0.80	1170	0.83	1208	0.87	1245	0.91	1281	0.96	1316	1.00	1349	1.04	1380	1.09
2100	1151	0.87	1189	0.90	1227	0.94	1263	0.99	1298	1.04	1331	1.08	1363	1.13	1394	1.17
2200	1173	0.94	1210	0.98	1246	1.02	1281	1.07	1315	1.12	1347	1.17	1379	1.22	1409	1.26
2300	1195	1.02	1231	1.06	1266	1.11	1300	1.16	1333	1.22	1364	1.27	1395	1.32	1424	1.36
2400	1217	1.10	1252	1.15	1286	1.20	1319	1.26	1351	1.32	1382	1.38	1411	1.43	1440	1.48

6 TON - KGB074S - DOWNFLOW

BLOWER TABLE INCLUDES RESISTANCE FOR BASE UNIT ONLY WITH DRY INDOOR COIL AND AIR FILTERS IN PLACE.

FOR ALL UNITS ADD:
1 - Any factory installed options air resistance (heat section, economizer, wet coil, etc.).
2 - Any field installed accessories air resistance (duct resistance, diffuser, etc.).
See page 43 for blower motors and drives and wet coil and options/accessory air resistance data.

Air Volume cfm	External Static - in. w.g.															
	0.10		0.20		0.30		0.40		0.50		0.60		0.70		0.80	
	RPM	BHP	RPM	BHP	RPM	BHP	RPM	BHP	RPM	BHP	RPM	BHP	RPM	BHP	RPM	BHP
1900	857	0.41	892	0.45	927	0.50	962	0.55	999	0.60	1036	0.65	1074	0.69	1112	0.73
2000	879	0.47	913	0.52	948	0.56	984	0.61	1020	0.67	1058	0.72	1096	0.76	1134	0.80
2100	900	0.53	935	0.58	970	0.63	1007	0.69	1044	0.74	1081	0.79	1119	0.84	1157	0.88
2200	922	0.60	958	0.65	994	0.71	1031	0.76	1068	0.82	1106	0.87	1143	0.91	1180	0.95
2300	947	0.67	983	0.73	1020	0.79	1057	0.85	1094	0.90	1131	0.95	1168	1.00	1205	1.03
2400	974	0.76	1010	0.82	1047	0.88	1084	0.94	1120	0.99	1157	1.04	1193	1.08	1230	1.12
2500	1002	0.85	1039	0.91	1075	0.97	1112	1.03	1148	1.08	1184	1.13	1220	1.17	1257	1.21
2600	1032	0.95	1068	1.01	1105	1.07	1141	1.13	1177	1.17	1213	1.22	1248	1.26	1284	1.31
2700	1062	1.05	1099	1.11	1136	1.17	1172	1.22	1207	1.27	1242	1.32	1277	1.37	1312	1.43
2800	1094	1.16	1131	1.22	1167	1.27	1202	1.32	1237	1.38	1271	1.43	1305	1.49	1339	1.56
2900	1127	1.26	1163	1.32	1198	1.38	1233	1.44	1267	1.50	1300	1.56	1334	1.64	1367	1.71

Air Volume cfm	External Static - in. w.g.															
	0.90		1.00		1.10		1.20		1.30		1.40		1.50		1.60	
	RPM	BHP	RPM	BHP	RPM	BHP	RPM	BHP	RPM	BHP	RPM	BHP	RPM	BHP	RPM	BHP
1900	1150	0.77	1188	0.81	1227	0.85	1267	0.88	1303	0.92	1333	0.97	1360	1.02	1392	1.06
2000	1172	0.84	1210	0.88	1248	0.92	1286	0.96	1321	1.00	1350	1.05	1377	1.10	1409	1.14
2100	1195	0.91	1233	0.95	1269	1.00	1306	1.04	1339	1.09	1367	1.14	1395	1.19	1426	1.23
2200	1218	0.99	1255	1.03	1290	1.09	1324	1.14	1356	1.19	1385	1.24	1413	1.28	1444	1.32
2300	1242	1.07	1277	1.13	1310	1.20	1343	1.26	1374	1.30	1403	1.34	1432	1.38	1464	1.42
2400	1267	1.16	1300	1.23	1332	1.31	1364	1.37	1394	1.41	1423	1.45	1453	1.48	1484	1.53
2500	1292	1.26	1324	1.34	1355	1.42	1387	1.48	1417	1.52	1445	1.56	1475	1.59	1506	1.64
2600	1318	1.38	1350	1.46	1380	1.55	1411	1.60	1440	1.64	1469	1.68	1498	1.71	1529	1.76
2700	1345	1.51	1376	1.60	1406	1.68	1436	1.73	1465	1.77	1493	1.80	1523	1.84	1553	1.88
2800	1372	1.65	1403	1.74	1433	1.82	1462	1.86	1490	1.90	1519	1.93	1548	1.97	1578	2.01
2900	1399	1.80	1430	1.89	1460	1.96	1489	2.00	1516	2.03	1544	2.06	1573	2.10	1603	2.14

6 TON - KGB074S - HORIZONTAL

BLOWER TABLE INCLUDES RESISTANCE FOR BASE UNIT ONLY WITH DRY INDOOR COIL AND AIR FILTERS IN PLACE.

FOR ALL UNITS ADD:
1 - Any factory installed options air resistance (heat section, economizer, wet coil, etc.).
2 - Any field installed accessories air resistance (duct resistance, diffuser, etc.).
See page 43 for blower motors and drives and wet coil and options/accessory air resistance data.

Air Volume cfm	External Static - in. w.g.															
	0.10		0.20		0.30		0.40		0.50		0.60		0.70		0.80	
	RPM	BHP	RPM	BHP	RPM	BHP	RPM	BHP	RPM	BHP	RPM	BHP	RPM	BHP	RPM	BHP
1900	796	0.38	837	0.43	878	0.48	918	0.53	958	0.58	997	0.62	1036	0.67	1074	0.71
2000	833	0.43	870	0.48	907	0.54	943	0.59	980	0.64	1018	0.69	1055	0.73	1093	0.77
2100	864	0.50	897	0.55	931	0.60	966	0.65	1002	0.71	1038	0.76	1075	0.80	1113	0.83
2200	887	0.57	920	0.62	953	0.67	988	0.73	1024	0.78	1060	0.83	1097	0.87	1135	0.90
2300	909	0.64	942	0.70	976	0.75	1011	0.81	1046	0.86	1083	0.91	1120	0.95	1157	0.98
2400	931	0.72	965	0.78	999	0.83	1035	0.89	1071	0.94	1108	0.99	1144	1.03	1181	1.07
2500	955	0.80	989	0.86	1024	0.92	1061	0.98	1097	1.03	1133	1.08	1170	1.11	1205	1.15
2600	981	0.90	1016	0.96	1052	1.01	1088	1.07	1124	1.12	1160	1.16	1195	1.20	1230	1.25
2700	1009	0.99	1044	1.05	1080	1.11	1116	1.16	1152	1.21	1187	1.26	1221	1.30	1254	1.35
2800	1038	1.10	1073	1.16	1109	1.21	1145	1.26	1180	1.31	1214	1.36	1247	1.40	1279	1.46
2900	1068	1.20	1104	1.26	1139	1.31	1174	1.36	1208	1.41	1240	1.47	1273	1.52	1304	1.58

Air Volume cfm	External Static - in. w.g.															
	0.90		1.00		1.10		1.20		1.30		1.40		1.50		1.60	
	RPM	BHP	RPM	BHP	RPM	BHP	RPM	BHP	RPM	BHP	RPM	BHP	RPM	BHP	RPM	BHP
1900	1112	0.74	1151	0.77	1190	0.81	1228	0.84	1265	0.88	1301	0.92	1335	0.97	1367	1.01
2000	1131	0.80	1170	0.83	1208	0.87	1245	0.91	1281	0.96	1316	1.00	1349	1.04	1380	1.09
2100	1151	0.87	1189	0.90	1227	0.94	1263	0.99	1298	1.04	1331	1.08	1363	1.13	1394	1.17
2200	1173	0.94	1210	0.98	1246	1.02	1281	1.07	1315	1.12	1347	1.17	1379	1.22	1409	1.26
2300	1195	1.02	1231	1.06	1266	1.11	1300	1.16	1333	1.22	1364	1.27	1395	1.32	1424	1.36
2400	1217	1.10	1252	1.15	1286	1.20	1319	1.26	1351	1.32	1382	1.38	1411	1.43	1440	1.48
2500	1240	1.20	1274	1.25	1307	1.31	1339	1.37	1370	1.43	1400	1.49	1428	1.55	1457	1.59
2600	1264	1.30	1297	1.35	1329	1.42	1360	1.49	1389	1.55	1418	1.61	1446	1.67	1475	1.72
2700	1287	1.40	1319	1.47	1350	1.54	1380	1.61	1409	1.68	1437	1.74	1465	1.79	1493	1.84
2800	1311	1.52	1342	1.59	1373	1.66	1402	1.74	1430	1.8	1457	1.87	1485	1.92	1513	1.97
2900	1335	1.65	1366	1.72	1395	1.79	1424	1.87	1451	1.94	1478	2.00	1505	2.05	1533	2.09

6 TON - KGB072H/KGB074H - DOWNFLOW

BLOWER TABLE INCLUDES RESISTANCE FOR BASE UNIT ONLY WITH DRY INDOOR COIL AND AIR FILTERS IN PLACE.

FOR ALL UNITS ADD:
1 - Any factory installed options air resistance (heat section, economizer, etc.).
2 - Any field installed accessories air resistance (duct resistance, diffuser, etc.).

See page 43 for blower motors and drives and wet coil and options/accessory air resistance data.

Air Volume (cfm)	External Static (in.w.g.)																			
	0.10		0.20		0.30		0.40		0.50		0.60		0.70		0.80		0.9		1.0	
	RPM	BHP	RPM	BHP	RPM	BHP	RPM	BHP	RPM	BHP	RPM	BHP	RPM	BHP	RPM	BHP	RPM	BHP	RPM	BHP
1900	523	0.47	557	0.53	591	0.59	625	0.64	660	0.68	694	0.72	730	0.76	764	0.8	796	0.84	824	0.89
2000	540	0.51	574	0.57	608	0.63	643	0.68	677	0.72	710	0.76	745	0.8	777	0.84	807	0.89	834	0.94
2100	559	0.56	592	0.61	626	0.67	660	0.72	694	0.77	727	0.81	760	0.85	790	0.89	819	0.94	844	1
2200	578	0.6	611	0.66	645	0.71	678	0.76	711	0.81	743	0.86	775	0.9	804	0.95	830	1	855	1.06
2300	599	0.65	632	0.71	664	0.76	697	0.81	729	0.86	760	0.91	790	0.96	817	1.01	842	1.07	867	1.12
2400	621	0.71	652	0.76	684	0.81	716	0.86	746	0.92	776	0.97	805	1.02	830	1.08	855	1.14	879	1.19
2500	642	0.77	673	0.82	704	0.87	734	0.93	764	0.98	793	1.04	820	1.09	845	1.15	868	1.21	892	1.27
2600	665	0.82	694	0.88	724	0.93	753	0.99	782	1.05	810	1.11	835	1.17	859	1.23	883	1.29	907	1.34
2700	688	0.89	716	0.94	744	1	773	1.06	800	1.13	827	1.19	851	1.25	875	1.31	898	1.37	922	1.42
2800	710	0.95	738	1.02	765	1.08	792	1.15	818	1.21	844	1.28	868	1.34	891	1.4	914	1.45	938	1.51
2900	733	1.03	759	1.1	785	1.17	811	1.24	836	1.3	861	1.37	885	1.43	908	1.49	931	1.54	954	1.59

Air Volume (cfm)	External Static (in.w.g.)																			
	1.1		1.2		1.3		1.4		1.5		1.6		1.7		1.8		1.9		2.0	
	RPM	BHP	RPM	BHP	RPM	BHP	RPM	BHP	RPM	BHP	RPM	BHP	RPM	BHP	RPM	BHP	RPM	BHP	RPM	BHP
1900	851	0.94	878	0.98	904	1.03	930	1.07	957	1.11	984	1.15	1010	1.2	1035	1.25	1060	1.31	1084	1.37
2000	860	0.99	886	1.04	913	1.08	939	1.12	966	1.17	992	1.21	1018	1.26	1043	1.32	1067	1.38	1090	1.43
2100	870	1.05	896	1.1	922	1.14	948	1.18	975	1.23	1001	1.27	1027	1.33	1051	1.39	1074	1.44	1097	1.5
2200	880	1.11	906	1.16	932	1.2	959	1.25	985	1.29	1011	1.34	1036	1.4	1059	1.46	1082	1.52	1105	1.58
2300	891	1.18	917	1.22	943	1.27	970	1.31	996	1.36	1021	1.41	1046	1.47	1068	1.53	1090	1.6	1113	1.66
2400	904	1.25	929	1.29	956	1.34	982	1.39	1008	1.43	1032	1.49	1056	1.55	1078	1.62	1099	1.68	1121	1.75
2500	917	1.32	942	1.37	968	1.41	994	1.46	1020	1.51	1044	1.57	1066	1.64	1088	1.7	1108	1.77	1130	1.84
2600	931	1.39	957	1.44	982	1.49	1008	1.54	1032	1.6	1055	1.66	1077	1.73	1098	1.8	1118	1.87	1139	1.94
2700	946	1.47	971	1.52	996	1.57	1021	1.63	1045	1.69	1067	1.76	1088	1.83	1108	1.91	1127	1.98	1148	2.05
2800	962	1.56	986	1.61	1011	1.66	1034	1.72	1057	1.79	1079	1.86	1099	1.94	1118	2.02	1137	2.09	1158	2.16
2900	978	1.65	1001	1.7	1025	1.75	1048	1.82	1069	1.89	1090	1.98	1109	2.06	1128	2.14	1147	2.22	1167	2.28

6 TON - KGB072H/KGB074H - HORIZONTAL

BLOWER TABLE INCLUDES RESISTANCE FOR BASE UNIT ONLY WITH DRY INDOOR COIL AND AIR FILTERS IN PLACE.

FOR ALL UNITS ADD:
1 - Any factory installed options air resistance (heat section, economizer, etc.).
2 - Any field installed accessories air resistance (duct resistance, diffuser, etc.).

See page 43 for blower motors and drives and wet coil and options/accessory air resistance data.

Air Volume (cfm)	External Static (in.w.g.)																			
	0.10		0.20		0.30		0.40		0.50		0.60		0.70		0.80		0.9		1.0	
	RPM	BHP	RPM	BHP	RPM	BHP	RPM	BHP	RPM	BHP	RPM	BHP	RPM	BHP	RPM	BHP	RPM	BHP	RPM	BHP
1900	490	0.5	521	0.53	554	0.56	588	0.6	622	0.63	656	0.67	690	0.71	725	0.75	759	0.79	790	0.83
2000	505	0.55	537	0.58	569	0.61	602	0.64	636	0.68	669	0.71	702	0.75	736	0.79	769	0.84	798	0.88
2100	521	0.6	552	0.62	584	0.66	617	0.69	650	0.73	682	0.76	715	0.8	747	0.84	778	0.89	807	0.93
2200	537	0.65	569	0.68	600	0.71	632	0.74	665	0.78	696	0.81	728	0.85	759	0.9	789	0.94	816	0.99
2300	554	0.7	585	0.73	617	0.76	648	0.79	680	0.83	711	0.87	741	0.91	771	0.95	799	1	826	1.05
2400	572	0.75	602	0.78	633	0.81	664	0.85	695	0.88	725	0.92	755	0.97	784	1.01	811	1.06	836	1.11
2500	591	0.8	620	0.83	650	0.87	680	0.9	711	0.94	740	0.98	769	1.03	797	1.08	823	1.13	847	1.18
2600	610	0.86	639	0.89	668	0.92	697	0.96	727	1	755	1.05	783	1.09	810	1.14	835	1.2	859	1.25
2700	630	0.91	658	0.95	686	0.98	715	1.02	743	1.07	771	1.11	798	1.16	824	1.22	848	1.27	872	1.32
2800	650	0.97	677	1.01	705	1.05	732	1.09	760	1.14	787	1.19	813	1.24	838	1.3	861	1.35	885	1.4
2900	670	1.03	697	1.07	724	1.11	750	1.16	777	1.21	803	1.27	828	1.32	852	1.38	876	1.44	898	1.49

Air Volume (cfm)	External Static (in.w.g.)																			
	1.1		1.2		1.3		1.4		1.5		1.6		1.7		1.8		1.9		2.0	
	RPM	BHP	RPM	BHP	RPM	BHP	RPM	BHP	RPM	BHP	RPM	BHP	RPM	BHP	RPM	BHP	RPM	BHP	RPM	BHP
1900	818	0.88	843	0.92	869	0.97	896	1.01	924	1.05	953	1.1	981	1.14	1008	1.19	1034	1.24	1059	1.29
2000	825	0.93	850	0.97	875	1.02	902	1.06	930	1.11	958	1.15	986	1.2	1012	1.25	1038	1.3	1061	1.35
2100	833	0.98	857	1.03	883	1.07	910	1.12	937	1.16	965	1.21	991	1.26	1017	1.31	1041	1.37	1064	1.42
2200	841	1.04	866	1.09	891	1.13	918	1.18	945	1.22	972	1.27	998	1.32	1022	1.38	1045	1.44	1067	1.49
2300	851	1.1	875	1.15	901	1.19	927	1.24	954	1.29	980	1.34	1004	1.39	1028	1.45	1050	1.51	1071	1.57
2400	861	1.16	886	1.21	911	1.26	937	1.3	963	1.35	988	1.41	1012	1.47	1034	1.53	1055	1.59	1076	1.65
2500	872	1.23	896	1.27	921	1.32	947	1.37	972	1.43	997	1.48	1019	1.55	1041	1.61	1061	1.68	1081	1.74
2600	883	1.3	908	1.35	933	1.4	958	1.45	982	1.5	1006	1.57	1027	1.63	1048	1.7	1068	1.77	1087	1.83
2700	895	1.37	920	1.42	944	1.47	969	1.53	992	1.59	1015	1.65	1036	1.72	1056	1.79	1075	1.86	1094	1.92
2800	908	1.45	932	1.5	956	1.56	980	1.62	1003	1.68	1025	1.75	1045	1.82	1064	1.89	1083	1.96	1102	2.02
2900	922	1.54	945	1.59	969	1.65	992	1.71	1014	1.78	1035	1.85	1055	1.92	1074	2	1092	2.07	1111	2.13

7.5 TON - KGB090S - DOWNFLOW

BLOWER TABLE INCLUDES RESISTANCE FOR BASE UNIT ONLY WITH DRY INDOOR COIL AND AIR FILTERS IN PLACE.

FOR ALL UNITS ADD:
1 - Any factory installed options air resistance (heat section, economizer, etc.).
2 - Any field installed accessories air resistance (duct resistance, diffuser, etc.).

See page 43 for blower motors and drives and wet coil and options/accessory air resistance data.

Air Volume (cfm)	External Static (in.w.g.)																			
	0.10		0.20		0.30		0.40		0.50		0.60		0.70		0.80		0.9		1.0	
	RPM	BHP	RPM	BHP	RPM	BHP	RPM	BHP	RPM	BHP	RPM	BHP	RPM	BHP	RPM	BHP	RPM	BHP	RPM	BHP
2400	621	0.71	652	0.76	684	0.81	716	0.86	746	0.92	776	0.97	805	1.02	830	1.08	855	1.14	879	1.19
2500	642	0.77	673	0.82	704	0.87	734	0.93	764	0.98	793	1.04	820	1.09	845	1.15	868	1.21	892	1.27
2600	665	0.82	694	0.88	724	0.93	753	0.99	782	1.05	810	1.11	835	1.17	859	1.23	883	1.29	907	1.34
2700	688	0.89	716	0.94	744	1.00	773	1.06	800	1.13	827	1.19	851	1.25	875	1.31	898	1.37	922	1.42
2800	710	0.95	738	1.02	765	1.08	792	1.15	818	1.21	844	1.28	868	1.34	891	1.40	914	1.45	938	1.51
2900	733	1.03	759	1.10	785	1.17	811	1.24	836	1.30	861	1.37	885	1.43	908	1.49	931	1.54	954	1.59
3000	754	1.12	779	1.19	805	1.26	830	1.33	855	1.40	879	1.46	902	1.52	925	1.58	948	1.63	970	1.69
3100	775	1.22	800	1.29	824	1.36	849	1.43	873	1.50	897	1.56	920	1.62	942	1.67	964	1.73	987	1.78
3200	796	1.32	820	1.39	844	1.47	868	1.53	892	1.60	915	1.66	937	1.72	959	1.77	981	1.83	1002	1.88
3300	816	1.43	840	1.50	863	1.57	887	1.64	910	1.70	933	1.76	955	1.82	976	1.88	997	1.93	1018	1.99
3400	837	1.54	860	1.61	883	1.68	906	1.75	929	1.81	951	1.87	972	1.93	993	1.98	1013	2.05	1033	2.11
3500	858	1.66	881	1.73	903	1.79	926	1.86	948	1.92	969	1.98	990	2.04	1009	2.10	1029	2.17	1048	2.24
3600	879	1.77	901	1.84	923	1.91	945	1.97	966	2.04	987	2.10	1006	2.16	1025	2.23	1044	2.30	1062	2.38

Air Volume (cfm)	External Static (in.w.g.)																			
	1.1		1.2		1.3		1.4		1.5		1.6		1.7		1.8		1.9		2.0	
	RPM	BHP	RPM	BHP	RPM	BHP	RPM	BHP	RPM	BHP	RPM	BHP	RPM	BHP	RPM	BHP	RPM	BHP	RPM	BHP
2400	904	1.25	929	1.29	956	1.34	982	1.39	1008	1.43	1032	1.49	1056	1.55	1078	1.62	1099	1.68	1121	1.75
2500	917	1.32	942	1.37	968	1.41	994	1.46	1020	1.51	1044	1.57	1066	1.64	1088	1.70	1108	1.77	1130	1.84
2600	931	1.39	957	1.44	982	1.49	1008	1.54	1032	1.60	1055	1.66	1077	1.73	1098	1.80	1118	1.87	1139	1.94
2700	946	1.47	971	1.52	996	1.57	1021	1.63	1045	1.69	1067	1.76	1088	1.83	1108	1.91	1127	1.98	1148	2.05
2800	962	1.56	986	1.61	1011	1.66	1034	1.72	1057	1.79	1079	1.86	1099	1.94	1118	2.02	1137	2.09	1158	2.16
2900	978	1.65	1001	1.70	1025	1.75	1048	1.82	1069	1.89	1090	1.98	1109	2.06	1128	2.14	1147	2.22	1167	2.28
3000	993	1.74	1016	1.79	1039	1.86	1061	1.93	1081	2.01	1101	2.10	1120	2.18	1138	2.27	1157	2.34	1177	2.41
3100	1009	1.84	1031	1.90	1052	1.97	1073	2.05	1093	2.13	1112	2.22	1130	2.31	1148	2.40	1167	2.47	1187	2.53
3200	1024	1.94	1045	2.01	1065	2.09	1085	2.17	1104	2.26	1123	2.36	1141	2.45	1159	2.53	1178	2.60	1198	2.66
3300	1038	2.06	1058	2.13	1078	2.22	1097	2.31	1116	2.40	1134	2.49	1152	2.58	1170	2.66	1189	2.73	1209	2.79
3400	1053	2.19	1072	2.27	1091	2.35	1109	2.45	1127	2.54	1145	2.63	1163	2.72	1181	2.79	1200	2.86	1220	2.92
3500	1067	2.32	1085	2.41	1103	2.50	1121	2.59	1138	2.69	1156	2.78	1174	2.85	1192	2.93	1212	2.99	1231	3.05
3600	1081	2.46	1098	2.55	1116	2.64	1133	2.74	1151	2.83	1168	2.91	1186	2.99	1205	3.06	1224	3.12	1243	3.17

7.5 TON - KGB090S - HORIZONTAL

BLOWER TABLE INCLUDES RESISTANCE FOR BASE UNIT ONLY WITH DRY INDOOR COIL AND AIR FILTERS IN PLACE.

FOR ALL UNITS ADD:
1 - Any factory installed options air resistance (heat section, economizer, etc.).
2 - Any field installed accessories air resistance (duct resistance, diffuser, etc.).

See page 43 for blower motors and drives and wet coil and options/accessory air resistance data.

Air Volume (cfm)	External Static (in.w.g.)																			
	0.10		0.20		0.30		0.40		0.50		0.60		0.70		0.80		0.9		1.0	
	RPM	BHP	RPM	BHP	RPM	BHP	RPM	BHP	RPM	BHP	RPM	BHP	RPM	BHP	RPM	BHP	RPM	BHP	RPM	BHP
2400	572	0.75	602	0.78	633	0.81	664	0.85	695	0.88	725	0.92	755	0.97	784	1.01	811	1.06	836	1.11
2500	591	0.80	620	0.83	650	0.87	680	0.90	711	0.94	740	0.98	769	1.03	797	1.08	823	1.13	847	1.18
2600	610	0.86	639	0.89	668	0.92	697	0.96	727	1.00	755	1.05	783	1.09	810	1.14	835	1.20	859	1.25
2700	630	0.91	658	0.95	686	0.98	715	1.02	743	1.07	771	1.11	798	1.16	824	1.22	848	1.27	872	1.32
2800	650	0.97	677	1.01	705	1.05	732	1.09	760	1.14	787	1.19	813	1.24	838	1.30	861	1.35	885	1.40
2900	670	1.03	697	1.07	724	1.11	750	1.16	777	1.21	803	1.27	828	1.32	852	1.38	876	1.44	898	1.49
3000	691	1.09	717	1.14	743	1.18	769	1.24	794	1.29	819	1.35	844	1.42	868	1.47	890	1.53	913	1.58
3100	712	1.16	737	1.21	762	1.27	787	1.32	812	1.39	836	1.45	860	1.51	883	1.57	906	1.63	928	1.68
3200	732	1.24	756	1.30	781	1.36	805	1.42	829	1.48	853	1.55	876	1.61	899	1.67	921	1.73	943	1.78
3300	752	1.33	776	1.39	799	1.46	823	1.52	847	1.59	870	1.65	893	1.71	916	1.77	937	1.83	959	1.88
3400	772	1.43	795	1.50	818	1.56	842	1.63	865	1.69	888	1.76	910	1.82	932	1.88	953	1.93	974	1.99
3500	792	1.54	815	1.61	838	1.67	861	1.74	883	1.80	906	1.87	928	1.93	949	1.98	970	2.04	990	2.10
3600	812	1.65	834	1.72	857	1.79	880	1.85	902	1.92	924	1.98	945	2.04	966	2.10	986	2.16	1005	2.22

Air Volume (cfm)	External Static (in.w.g.)																			
	1.1		1.2		1.3		1.4		1.5		1.6		1.7		1.8		1.9		2.0	
	RPM	BHP	RPM	BHP	RPM	BHP	RPM	BHP	RPM	BHP	RPM	BHP	RPM	BHP	RPM	BHP	RPM	BHP	RPM	BHP
2400	861	1.16	886	1.21	911	1.26	937	1.30	963	1.35	988	1.41	1012	1.47	1034	1.53	1055	1.59	1076	1.65
2500	872	1.23	896	1.27	921	1.32	947	1.37	972	1.43	997	1.48	1019	1.55	1041	1.61	1061	1.68	1081	1.74
2600	883	1.30	908	1.35	933	1.40	958	1.45	982	1.50	1006	1.57	1027	1.63	1048	1.70	1068	1.77	1087	1.83
2700	895	1.37	920	1.42	944	1.47	969	1.53	992	1.59	1015	1.65	1036	1.72	1056	1.79	1075	1.86	1094	1.92
2800	908	1.45	932	1.50	956	1.56	980	1.62	1003	1.68	1025	1.75	1045	1.82	1064	1.89	1083	1.96	1102	2.02
2900	922	1.54	945	1.59	969	1.65	992	1.71	1014	1.78	1035	1.85	1055	1.92	1074	2.00	1092	2.07	1111	2.13
3000	936	1.63	959	1.68	982	1.74	1004	1.81	1026	1.88	1046	1.96	1065	2.03	1084	2.11	1102	2.18	1120	2.25
3100	950	1.73	973	1.78	995	1.85	1017	1.91	1037	1.99	1057	2.07	1076	2.15	1094	2.23	1112	2.31	1130	2.38
3200	965	1.83	987	1.89	1008	1.95	1029	2.03	1049	2.11	1068	2.19	1087	2.28	1105	2.36	1123	2.44	1141	2.51
3300	980	1.94	1001	2.00	1022	2.07	1042	2.15	1061	2.23	1080	2.32	1098	2.41	1116	2.50	1134	2.58	1152	2.65
3400	995	2.05	1015	2.12	1035	2.19	1054	2.28	1073	2.37	1092	2.46	1110	2.55	1128	2.64	1145	2.72	1163	2.79
3500	1010	2.17	1029	2.24	1048	2.32	1067	2.41	1086	2.51	1104	2.60	1122	2.70	1139	2.78	1157	2.86	1174	2.93
3600	1024	2.30	1043	2.38	1062	2.46	1080	2.55	1098	2.65	1116	2.75	1133	2.84	1151	2.93	1168	3.01	1186	3.08

BLOWER DATA

BELT DRIVE KIT SPECIFICATIONS - 036-074S

Model No.	Motor HP		No. of Speeds	Drive Kits and RPM Range							
	Nominal	Maximum		A01	A02	A03	A04	A05	A06	A07	A08
036	1	1.15	1	673-1010	- - -	- - -	- - -	897-1346	- - -	- - -	- - -
	2	2.3	1	673-1010	- - -	- - -	- - -	897-1346	- - -	- - -	- - -
048	1	1.15	1	- - -	745-1117	- - -	- - -	- - -	1071-1429	- - -	- - -
	2	2.3	1	- - -	745-1117	- - -	- - -	- - -	1071-1429	- - -	- - -
060	1	1.15	1	- - -	- - -	833-1250	- - -	- - -	- - -	1212-1548	- - -
	2	2.3	1	- - -	- - -	833-1250	- - -	- - -	- - -	1212-1548	- - -
074S	1	1.5	2	- - -	- - -	- - -	968-1340	- - -	- - -	- - -	1193-1591
	2	2.3	2	- - -	- - -	- - -	968-1340	- - -	- - -	- - -	1193-1591

BELT DRIVE KIT SPECIFICATIONS - 072H/074H/090S

Model No.	Motor HP		No. of Speeds	Drive Kits and RPM Range			
	Nominal	Maximum		AA01	AA02	AA03	AA04
072H	1	1.15	1	522-784	632-875	798-1105	- - -
	2	2.3	1	522-784	632-875	798-1105	- - -
074H	1	1.15	2	522-784	632-875	798-1105	- - -
	2	2.3	2	522-784	632-875	798-1105	- - -
090S4B	1	1.15	1	522-784	632-875	798-1105	- - -
	2	2.3	1	522-784	632-875	798-1105	- - -
	3	3.45	1	522-784	632-875	798-1105	921-1228
090S4T	2	2.3	2	522-784	632-875	798-1105	- - -

NOTE - Using total air volume and system static pressure requirements determine from blower performance tables rpm and motor hp required. Maximum usable hp of motors furnished are shown. In Canada, nominal motor hp is also maximum usable motor hp. If motors of comparable hp are used, be sure to keep within the service factor limitations outlined on the motor nameplate.

OPTIONS / ACCESSORIES AIR RESISTANCE FOR 024-074 MODELS - in. w.g.

Air Volume cfm	Wet Indoor Coil			Dehumification Coil		Gas Heat		Economizer	Filters	
	024-048	060	072/074	024-048	060, 074	Medium Input	High Input		MERV 8	MERV 13
800	0.01	0.01	0.01	0.00	0.00	0.02	0.02	0.04	0.04	0.05
1000	0.02	0.02	0.01	0.00	0.00	0.02	0.02	0.04	0.04	0.07
1200	0.03	0.04	0.02	0.01	0.00	0.02	0.02	0.04	0.04	0.07
1400	0.04	0.05	0.03	0.02	0.01	0.02	0.03	0.04	0.04	0.07
1600	0.05	0.06	0.04	0.03	0.02	0.03	0.04	0.04	0.04	0.07
1800	0.06	0.07	0.05	0.04	0.02	0.03	0.05	0.05	0.05	0.07
2000	0.08	0.09	0.06	0.04	0.03	0.04	0.06	0.05	0.05	0.08
2200	0.09	0.10	0.07	- - -	0.04	0.04	0.07	0.05	0.05	0.08
2400	0.10	0.12	0.08	- - -	0.04	0.05	0.08	0.05	0.05	0.08
2600	0.11	0.13	0.09	- - -	0.05	0.05	0.09	0.06	0.05	0.08
2800	0.13	0.15	0.10	- - -	0.05	0.06	0.10	0.06	0.05	0.08
3000	0.14	0.16	0.12	- - -	0.06	0.07	0.11	0.06	0.05	0.08

OPTIONS / ACCESSORIES AIR RESISTANCE FOR 090 MODELS - in. w.g.

Air Volume cfm	Wet Indoor Coil	Dehumification Coil	Gas Heat	Economizer	Filters	
			High Input		MERV 8	MERV 13
2400	0.08	0.04	0.03	0.05	0.05	0.08
2600	0.09	0.05	0.04	0.06	0.05	0.08
2800	0.10	0.05	0.04	0.06	0.05	0.08
3000	0.11	0.06	0.04	0.06	0.05	0.08
3200	0.12	0.06	0.04	0.06	0.06	0.09
3400	0.14	0.07	0.05	0.06	0.06	0.09
3600	0.15	0.07	0.05	0.06	0.06	0.10

BLOWER DATA

CEILING DIFFUSERS AIR RESISTANCE (in. w.g.)

Air Volume cfm	RTD9-65S Step–Down Diffuser			FD9-65S Flush Diffuser	RTD11-95S Step–Down Diffuser			FD11-95S Flush Diffuser
	2 Ends Open	1 Side & 2 Ends Open	All Ends & Sides Open		2 Ends Open	1 Side & 2 Ends Open	All Ends & Sides Open	
800	0.15	0.13	0.11	0.11	- - -	- - -	- - -	- - -
1000	0.19	0.16	0.14	0.14	- - -	- - -	- - -	- - -
1200	0.25	0.20	0.17	0.17	- - -	- - -	- - -	- - -
1400	0.33	0.26	0.20	0.20	- - -	- - -	- - -	- - -
1600	0.43	0.32	0.20	0.24	- - -	- - -	- - -	- - -
1800	0.56	0.40	0.30	0.30	0.13	0.11	0.09	0.09
2000	0.73	0.50	0.36	0.36	0.15	0.13	0.11	0.10
2200	0.95	0.63	0.44	0.44	0.18	0.15	0.12	0.12
2400	- - -	- - - -	- - -	- - -	0.21	0.18	0.15	0.14
2600	- - -	- - - -	- - -	- - -	0.24	0.21	0.18	0.17
2800	- - -	- - - -	- - -	- - -	0.27	0.24	0.21	0.20
3000	- - -	- - - -	- - -	- - -	0.32	0.29	0.25	0.25
3200	- - -	- - - -	- - -	- - -	0.41	0.37	0.32	0.31
3400	- - -	- - - -	- - -	- - -	0.50	0.45	0.39	0.37
3600	- - -	- - - -	- - -	- - -	0.61	0.54	0.48	0.44

CEILING DIFFUSER AIR THROW DATA

Air Volume - cfm	[1] Effective Throw - ft.	
Model No.	**RTD9-65S**	**FD9-65S**
800	10 - 17	14 - 18
1000	10 - 17	15 - 20
1200	11 - 18	16 - 22
1400	12 - 19	17 - 24
1600	12 - 20	18 - 25
1800	13 - 21	20 - 28
2000	14 - 23	21 - 29
2200	16 - 25	22 - 30
Model No.	**RTD11-95S**	**FD11-95S**
2600	24 - 29	19 - 24
2800	25 - 30	20 - 28
3000	27 - 33	21 - 29
3200	28 - 35	22 - 29
3400	30 - 37	22 - 30
3600	25 - 33	22 - 24

[1] Effective throw based on terminal velocities of 75 ft. per minute.

POWER EXHAUST FAN PERFORMANCE

Return Air System Static Pressure - in. w.g.	Air Volume Exhausted cfm
0.00	2000
0.05	1990
0.10	1924
0.15	1810
0.20	1664
0.25	1507
0.30	1350
0.35	1210

OUTDOOR SOUND DATA

Unit Model No.	Octave Band Sound Power Levels dBA, re 10^{-12} Watts - Center Frequency - Hz							[1] Sound Rating Number (dBA)
	125	250	500	1000	2000	4000	8000	
KGB024, 030, 036, 048	62	66	70	69	66	60	50	74
KGB060	72	75	78	77	73	68	58	83
KGB072, 074, 090	66	71	74	73	70	65	57	79

Note - The octave sound power data does not include tonal corrections.

[1] Sound Rating Number according to AHRI Standard 270-95 (includes pure tone penalty). Sound Rating Number is the overall A-Weighted Sound Power Level, (LWA), dBA (100 Hz to 10,000 Hz).

ELECTRICAL DATA — 2 TON | 2.5 TON ECM

DIRECT DRIVE ECM BLOWER		KGB024S4E	KGB030S4E
[1] Voltage - 60hz		208/230V - 1 Ph	208/230V - 1 Ph
Compressor	Rated Load Amps	10.9	13.5
	Locked Rotor Amps	60	73
Outdoor Fan Motor	Full Load Amps	1.7	1.7
Service Outlet 115V GFI (amps)		15	15
Indoor Blower Motor	Horsepower	0.33	0.33
	Type	Direct (ECM)	Direct (ECM)
	Full Load Amps	2.9	2.9
[2] Maximum Overcurrent Protection	Unit Only	25	30
[3] Minimum Circuit Ampacity	Unit Only	19	22
ELECTRICAL ACCESSORIES			
Disconnect	Standard Access	**20W17**	**20W17**
	Hinged Access	**20W23**	**20W23**

NOTE - All units have a minimum Short Circuit Current Rating (SCCR) of 5000 amps.

[1] Extremes of operating range are plus and minus 10% of line voltage.

[2] HACR type breaker or fuse.

[3] Refer to National or Canadian Electrical Code manual to determine wire, fuse and disconnect size requirements.

ELECTRICAL DATA — 3 TON | 4 TON | 5 TON ECM

DIRECT DRIVE ECM BLOWER		KGB036S4E	KGB048S4E	KGB060S4E
[1] Voltage - 60hz		208/230V - 1 Ph	208/230V - 1 Ph	208/230V - 1 Ph
Compressor	Rated Load Amps	15.3	20	22.1
	Locked Rotor Amps	70	99	125
Outdoor Fan Motor	Full Load Amps	1.7	1.7	1.65
Power Exhaust (1) 0.33 HP	Full Load Amps	2.4	2.4	2.4
Service Outlet 115V GFI (amps)		15	15	15
Indoor Blower Motor	Horsepower	0.50	0.75	1.0
	Type	Direct (ECM)	Direct (ECM)	Direct (ECM)
	Full Load Amps	4.6	6.3	8.4
[2] Maximum Overcurrent Protection	Unit Only	40	50	50
	with (1) 0.33 HP Power Exhaust	40	50	60
[3] Minimum Circuit Ampacity	Unit Only	26	33	37
	with (1) 0.33 HP Power Exhaust	28	36	40
ELECTRICAL ACCESSORIES				
Disconnect	Standard Access	**20W17**	**20W17**	**20W20**
	Hinged Access	**20W23**	**20W23**	**20W26**

NOTE - All units have a minimum Short Circuit Current Rating (SCCR) of 5000 amps.

[1] Extremes of operating range are plus and minus 10% of line voltage.

[2] HACR type breaker or fuse.

[3] Refer to National or Canadian Electrical Code manual to determine wire, fuse and disconnect size requirements.

ELECTRICAL DATA — 3 TON PSC

KGB036S4D - DIRECT DRIVE PSC BLOWER

[1] Voltage - 60hz		208/230V - 3 Ph	460V - 3 Ph	575V - 3 Ph
Compressor	Rated Load Amps	8.7	4	3.6
	Locked Rotor Amps	70	31	27
Outdoor Fan Motor	Full Load Amps	1.7	1.1	0.7
Power Exhaust (1) 0.33 HP	Full Load Amps	2.4	1.3	1
Service Outlet 115V GFI (amps)		15	15	20
Indoor Blower Motor	Horsepower	0.5	0.5	0.5
	Type	Direct (PSC)	Direct (PSC)	Direct (PSC)
	Full Load Amps	3.9	2	2
[2] Maximum Overcurrent Protection	Unit Only	25	15	15
	with (1) 0.33 HP Power Exhaust	25	15	15
[3] Minimum Circuit Ampacity	Unit Only	17	9	8
	with (1) 0.33 HP Power Exhaust	19	10	9
ELECTRICAL ACCESSORIES				
Disconnect	Standard Access	**20W17**	**20W17**	**20W17**
	Hinged Access	**20W23**	**20W23**	**20W23**

NOTE - All units have a minimum Short Circuit Current Rating (SCCR) of 5000 amps.

[1] Extremes of operating range are plus and minus 10% of line voltage.

[2] HACR type breaker or fuse.

[3] Refer to National or Canadian Electrical Code manual to determine wire, fuse and disconnect size requirements.

ELECTRICAL DATA — 4 TON PSC

KGB048S4D - STANDARD EFFICIENCY - DIRECT DRIVE PSC BLOWER

[1] Voltage - 60hz		208/230V - 3 Ph	460V - 3 Ph	575V - 3 Ph
Compressor	Rated Load Amps	11	5.5	4.7
	Locked Rotor Amps	86	37	34
Outdoor Fan Motor	Full Load Amps	1.7	1.1	0.7
Power Exhaust (1) 0.33 HP	Full Load Amps	2.4	1.3	1
Service Outlet 115V GFI (amps)		15	1.3	1
Indoor Blower Motor	Horsepower	0.5	0.5	0.5
	Type	Direct (PSC)	Direct (PSC)	Direct (PSC)
	Full Load Amps	3.9	2	2
[2] Maximum Overcurrent Protection	Unit Only	30	15	15
	with (1) 0.33 HP Power Exhaust	30	15	15
[3] Minimum Circuit Ampacity	Unit Only	20	10	9
	with (1) 0.33 HP Power Exhaust	22	12	10
ELECTRICAL ACCESSORIES				
Disconnect	Standard Access	**20W17**	**20W17**	**20W17**
	Hinged Access	**20W23**	**20W23**	**20W23**

NOTE - All units have a minimum Short Circuit Current Rating (SCCR) of 5000 amps.

[1] Extremes of operating range are plus and minus 10% of line voltage.

[2] HACR type breaker or fuse.

[3] Refer to National or Canadian Electrical Code manual to determine wire, fuse and disconnect size requirements.

ELECTRICAL DATA — 5 TON PSC

KGB060S4D - STANDARD EFFICIENCY - DIRECT DRIVE PSC BLOWER

[1] Voltage - 60hz		208/230V - 3 Ph	460V - 3 Ph	575V - 3 Ph
Compressor	Rated Load Amps	13.5	8	5
	Locked Rotor Amps	109	59	40
Outdoor Fan Motor	Full Load Amps	1.7	0.8	1
Power Exhaust (1) 0.33 HP	Full Load Amps	2.4	1.3	1
Service Outlet 115V GFI (amps)		15	15	20
Indoor Blower Motor	Horsepower	0.75	0.75	0.75
	Type	Direct (PSC)	Direct (PSC)	Direct (PSC)
	Full Load Amps	4.9	2.5	2.5
[2] Maximum Overcurrent Protection	Unit Only	35	20	15
	with (1) 0.33 HP Power Exhaust	35	20	15
[3] Minimum Circuit Ampacity	Unit Only	24	14	10
	with (1) 0.33 HP Power Exhaust	26	15	11

ELECTRICAL ACCESSORIES

Disconnect	Standard Access	**20W20**	**20W20**	**20W20**
	Hinged Access	**20W26**	**20W26**	**20W26**

NOTE - All units have a minimum Short Circuit Current Rating (SCCR) of 5000 amps.

[1] Extremes of operating range are plus and minus 10% of line voltage.

[2] HACR type breaker or fuse.

[3] Refer to National or Canadian Electrical Code manual to determine wire, fuse and disconnect size requirements.

ELECTRICAL DATA — 3 TON BELT

KGB036S4B - STANDARD EFFICIENCY - BELT DRIVE BLOWER (SINGLE SPEED)

[1] Voltage - 60hz		208/230V - 3 Ph		460V - 3 Ph		575V - 3 Ph	
Compressor	Rated Load Amps	8.7		4		3.6	
	Locked Rotor Amps	70		31		27	
Outdoor Fan Motor	Full Load Amps	1.7		1.1		0.7	
Power Exhaust (1) 0.33 HP	Full Load Amps	2.4		1.3		1	
Service Outlet 115V GFI (amps)		15		15		20	
Indoor Blower Motor	Horsepower	1	2	1	2	1	2
	Type	Belt	Belt	Belt	Belt	Belt	Belt
	Full Load Amps	4.6	7.5	2.1	3.4	1.7	2.7
[2] Maximum Overcurrent Protection	Unit Only	25	25	15	15	15	15
	with (1) 0.33 HP Power Exhaust	25	30	15	15	15	15
[3] Minimum Circuit Ampacity	Unit Only	18	21	9	10	7	8
	with (1) 0.33 HP Power Exhaust	20	23	10	11	8	9

ELECTRICAL ACCESSORIES

Disconnect	Standard Access	**20W17**	**20W17**	**20W17**
	Hinged Access	**20W23**	**20W23**	**20W23**

NOTE - All units have a minimum Short Circuit Current Rating (SCCR) of 5000 amps.

[1] Extremes of operating range are plus and minus 10% of line voltage.

[2] HACR type breaker or fuse.

[3] Refer to National or Canadian Electrical Code manual to determine wire, fuse and disconnect size requirements.

ELECTRICAL DATA — 4 TON BELT

KGB048S4B - STANDARD EFFICIENCY - BELT DRIVE BLOWER (SINGLE SPEED)

[1] Voltage - 60hz		208/230V - 3 Ph		460V - 3 Ph		575V - 3 Ph	
Compressor	Rated Load Amps	11		5.5		4.7	
	Locked Rotor Amps	86		37		34	
Outdoor Fan Motor	Full Load Amps	1.7		1.1		0.7	
Power Exhaust (1) 0.33 HP	Full Load Amps	2.4		1.3		1	
Service Outlet 115V GFI (amps)		15		15		20	
Indoor Blower Motor	Horsepower	1	2	1	2	1	2
	Type	Belt	Belt	Belt	Belt	Belt	Belt
	Full Load Amps	4.6	7.5	2.1	3.4	1.7	2.7
[2] Maximum Overcurrent Protection	Unit Only	30	30	15	15	15	15
	with (1) 0.33 HP Power Exhaust	30	35	15	15	15	15
[3] Minimum Circuit Ampacity	Unit Only	21	23	11	12	9	10
	with (1) 0.33 HP Power Exhaust	23	26	12	13	10	11

ELECTRICAL ACCESSORIES

Disconnect	Standard Access	**20W17**	**20W17**	**20W17**
	Hinged Access	**20W23**	**20W23**	**20W23**

NOTE - All units have a minimum Short Circuit Current Rating (SCCR) of 5000 amps.

[1] Extremes of operating range are plus and minus 10% of line voltage.

[2] HACR type breaker or fuse.

[3] Refer to National or Canadian Electrical Code manual to determine wire, fuse and disconnect size requirements.

ELECTRICAL DATA — 5 TON BELT

KGB060S4B - STANDARD EFFICIENCY - BELT DRIVE BLOWER (SINGLE SPEED)

[1] Voltage - 60hz		208/230V - 3 Ph		460V - 3 Ph		575V - 3 Ph	
Compressor	Rated Load Amps	13.5		8		5	
	Locked Rotor Amps	109		59		40	
Outdoor Fan Motor	Full Load Amps	1.7		0.8		1	
Power Exhaust (1) 0.33 HP	Full Load Amps	2.4		1.3		1	
Service Outlet 115V GFI (amps)		15		15		20	
Indoor Blower Motor	Horsepower	1	2	1	2	1	2
	Type	Belt	Belt	Belt	Belt	Belt	Belt
	Full Load Amps	4.6	7.5	2.1	3.4	1.7	2.7
[2] Maximum Overcurrent Protection	Unit Only	35	35	20	20	15	15
	with (1) 0.33 HP Power Exhaust	35	40	20	20	15	15
[3] Minimum Circuit Ampacity	Unit Only	24	27	13	15	9	10
	with (1) 0.33 HP Power Exhaust	26	29	15	16	10	11

ELECTRICAL ACCESSORIES

Disconnect	Standard Access	**20W20**	**20W20**	**20W20**
	Hinged Access	**20W26**	**20W26**	**20W26**

NOTE - All units have a minimum Short Circuit Current Rating (SCCR) of 5000 amps.

[1] Extremes of operating range are plus and minus 10% of line voltage.

[2] HACR type breaker or fuse.

[3] Refer to National or Canadian Electrical Code manual to determine wire, fuse and disconnect size requirements.

ELECTRICAL DATA — 6 TON BELT

KGB072H4B - HIGH EFFICIENCY - BELT DRIVE BLOWER (SINGLE SPEED)

[1] Voltage - 60hz		460V - 3 Ph		575V - 3 Ph	
Compressor	Rated Load Amps	8.2		6.6	
	Locked Rotor Amps	66.1		55.3	
Outdoor Fan Motor	Full Load Amps	1.3		1	
Power Exhaust (1) 0.33 HP	Full Load Amps	1.3		1	
Service Outlet 115V GFI (amps)		15		20	
Indoor Blower Motor	Horsepower	1	2	1	2
	Type	Belt	Belt	Belt	Belt
	Full Load Amps	2.1	3.4	1.7	2.7
[2] Maximum Overcurrent Protection	Unit Only	20	20	15	15
	with (1) 0.33 HP Power Exhaust	20	20	15	15
[3] Minimum Circuit Ampacity	Unit Only	13	14	10	11
	with (1) 0.33 HP Power Exhaust	14	15	11	12

ELECTRICAL ACCESSORIES

Disconnect	Standard Access	**20W20**	**20W20**
	Hinged Access	**20W26**	**20W26**

NOTE - All units have a minimum Short Circuit Current Rating (SCCR) of 5000 amps.

[1] Extremes of operating range are plus and minus 10% of line voltage.

[2] HACR type breaker or fuse.

[3] Refer to National or Canadian Electrical Code manual to determine wire, fuse and disconnect size requirements.

ELECTRICAL DATA — 6 TON BELT

KGB074S4B / KGB074S4T - STANDARD EFFICIENCY - BELT DRIVE BLOWER (SINGLE OR TWO SPEED)

[1] Voltage - 60hz		208/230V - 3 Ph		460V - 3 Ph		575V - 3 Ph	
Compressor	Rated Load Amps	17.6		8.5		6.3	
	Locked Rotor Amps	136		66.1		55.3	
Outdoor Fan Motor	Full Load Amps	2.4		1.3		1	
Power Exhaust (1) 0.33 HP	Full Load Amps	2.4		1.3		1	
Service Outlet 115V GFI (amps)		15		15		20	
Indoor Blower Motor	Horsepower	1	2	1	2	1	2
	Type	Belt	Belt	Belt	Belt	Belt	Belt
	Full Load Amps	4.6	7.5	2.1	3.4	1.7	2.7
[2] Maximum Overcurrent Protection	Unit Only	45	45	20	20	15	15
	with (1) 0.33 HP Power Exhaust	45	50	20	25	15	15
[3] Minimum Circuit Ampacity	Unit Only	29	32	15	16	11	12
	with (1) 0.33 HP Power Exhaust	32	35	16	17	12	13
ELECTRICAL ACCESSORIES							
Disconnect	Standard Access	**20W20**		**20W20**		**20W20**	
	Hinged Access	**20W26**		**20W26**		**20W26**	

NOTE - All units have a minimum Short Circuit Current Rating (SCCR) of 5000 amps.

[1] Extremes of operating range are plus and minus 10% of line voltage.

[2] HACR type breaker or fuse.

[3] Refer to National or Canadian Electrical Code manual to determine wire, fuse and disconnect size requirements.

ELECTRICAL DATA — 6 TON BELT

KGB074H4T - HIGH EFFICIENCY - BELT DRIVE BLOWER (TWO SPEED)

[1] Voltage - 60hz		208/230V - 3 Ph		460V - 3 Ph		575V - 3 Ph	
Compressor	Rated Load Amps	17.6		8.5		6.3	
	Locked Rotor Amps	136		66.1		55.3	
Outdoor Fan Motor	Full Load Amps	2.4		1.3		1	
Power Exhaust (1) 0.33 HP	Full Load Amps	2.4		1.3		1	
Service Outlet 115V GFI (amps)		15		15		20	
Indoor Blower Motor	Horsepower	1	2	1	2	1	2
	Type	Belt	Belt	Belt	Belt	Belt	Belt
	Full Load Amps	4.6	7.5	2.1	3.4	1.7	2.7
[2] Maximum Overcurrent Protection	Unit Only	45	45	20	20	15	15
	with (1) 0.33 HP Power Exhaust	45	50	20	25	15	15
[3] Minimum Circuit Ampacity	Unit Only	29	32	15	16	11	12
	with (1) 0.33 HP Power Exhaust	32	35	16	17	12	13
ELECTRICAL ACCESSORIES							
Disconnect	Standard Access	**20W20**		**20W20**		**20W20**	
	Hinged Access	**20W26**		**20W26**		**20W26**	

NOTE - All units have a minimum Short Circuit Current Rating (SCCR) of 5000 amps.

[1] Extremes of operating range are plus and minus 10% of line voltage.

[2] HACR type breaker or fuse.

[3] Refer to National or Canadian Electrical Code manual to determine wire, fuse and disconnect size requirements.

ELECTRICAL DATA — 7.5 TON BELT

KGB090S4B STANDARD EFFICIENCY - BELT DRIVE BLOWER (SINGLE SPEED)

[1] Voltage - 60hz		208/230V - 3 Ph			460V - 3 Ph			575V - 3 Ph		
Compressor	Rated Load Amps	26.9			12			9		
	Locked Rotor Amps	164			94			65		
Outdoor Fan Motor	Full Load Amps	3			1.5			1.2		
Power Exhaust (1) 0.33 HP	Full Load Amps	2.4			1.3			1		
Service Outlet 115V GFI (amps)		15			15			20		
Indoor Blower Motor	Horsepower	1	2	3	1	2	3	1	2	3
	Type	Belt	Belt	Belt	Belt	Belt	Belt	Belt	Belt	Belt
	Full Load Amps	4.6	7.5	10.6	2.1	3.4	4.8	1.7	2.7	3.9
[2] Maximum Overcurrent Protection	Unit Only	60	70	70	30	30	30	20	20	25
	with (1) 0.33 HP Power Exhaust	70	70	70	30	30	30	20	25	25
[3] Minimum Circuit Ampacity	Unit Only	42	45	48	19	20	22	15	16	17
	with (1) 0.33 HP Power Exhaust	44	47	50	20	22	23	16	17	18

ELECTRICAL ACCESSORIES

Disconnect	Standard Access - **0-22.5 kW**	**20W18**	**20W18**	**20W18**	**20W18**	**20W18**
	30 kW	**20W19**	**20W19**	**20W19**	**20W18**	**20W18**
	Hinged Access - **0-22.5 kW**	**20W24**	**20W24**	**20W24**	**20W24**	**20W24**
	30 kW	**20W25**	**20W25**	**20W25**	**20W24**	**20W24**

NOTE - All units have a minimum Short Circuit Current Rating (SCCR) of 5000 amps.

[1] Extremes of operating range are plus and minus 10% of line voltage.

[2] HACR type breaker or fuse.

[3] Refer to National or Canadian Electrical Code manual to determine wire, fuse and disconnect size requirements.

[4] Factory installed circuit breaker not available.

ELECTRICAL DATA — 7.5 TON BELT

KGB090S4T STANDARD EFFICIENCY - BELT DRIVE BLOWER (TWO SPEED)

[1] Voltage - 60hz		208/230V - 3 Ph	460V - 3 Ph	575V - 3 Ph
Compressor	Rated Load Amps	26.9	12	9
	Locked Rotor Amps	164	94	65
Outdoor Fan Motor	Full Load Amps	3	1.5	1.2
Power Exhaust (1) 0.33 HP	Full Load Amps	2.4	1.3	1
Service Outlet 115V GFI (amps)		15	15	20
Indoor Blower Motor	Horsepower	2	2	2
	Type	Belt	Belt	Belt
	Full Load Amps	7.5	3.4	2.7
[2] Maximum Overcurrent Protection	Unit Only	70	30	20
	with (1) 0.33 HP Power Exhaust	70	30	25
[3] Minimum Circuit Ampacity	Unit Only	45	20	16
	with (1) 0.33 HP Power Exhaust	47	22	17

ELECTRICAL ACCESSORIES

Disconnect	Standard Access	**20W20**	**20W20**	**20W20**
	Hinged Access	**20W26**	**20W26**	**20W26**

NOTE - All units have a minimum Short Circuit Current Rating (SCCR) of 5000 amps.

[1] Extremes of operating range are plus and minus 10% of line voltage.

[2] HACR type breaker or fuse.

[3] Refer to National or Canadian Electrical Code manual to determine wire, fuse and disconnect size requirements.

UNIT CLEARANCES

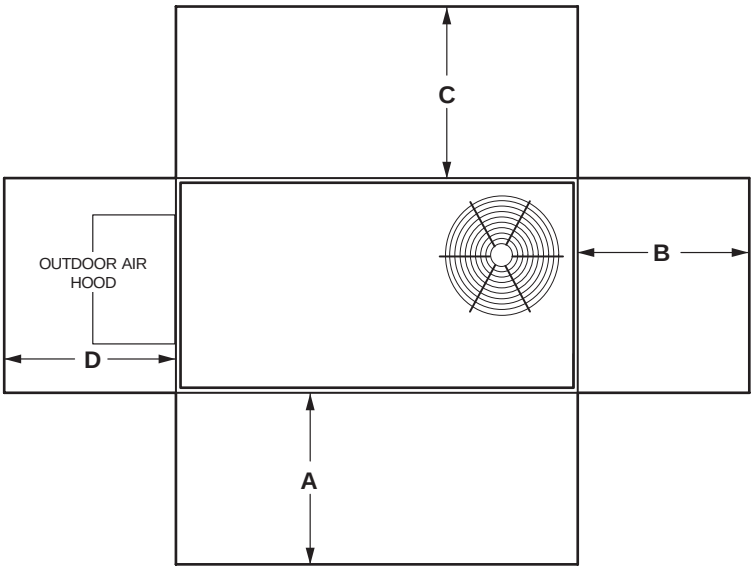

[1] Unit Clearance	A		B		C		D		Top Clearance
	in.	mm	in.	mm	in.	mm	in.	mm	
Service Clearance	48	1219	36	914	36	914	36	914	**Unobstructed**
Clearance to Combustibles	36	914	1	25	1	25	1	25	
Minimum Operation Clearance	36	914	36	914	36	914	36	914	

NOTE - Entire perimeter of unit base requires support when elevated above the mounting surface.

[1] **Service Clearance** - Required for removal of serviceable parts.
Clearance to Combustibles - Required clearance to combustible material.
Minimum Operation Clearance - Required clearance for proper unit operation.

OPTIONAL CONVENTIONAL TEMPERATURE CONTROL SYSTEMS

Item		Model No.	Catalog No.
7-DAY PROGRAMMABLE THERMOSTAT - BACNET COMPATIBLE WITH REHEAT FUNCTION			
	• For units with or without [1] Dehumidification Option • BTL listed MS/TP ensures compatibility with any BACnet system • Built-in control programs for conventional and heat pump applications • Conventional systems up to 3-stage heat and 3-stage cool • Heat pumps with 1 or 2 compressors and up to 2-stage auxiliary heat • On-board temperature and humidity sensor • Multiple configurable inputs and outputs enable advanced control strategies • Set-up Wizard enables rapid system configuration • No special tools required for installation or commissioning • Seven-day (2, 4 or 6 event) occupancy scheduling per day • Backlit 5-inch LCD touchscreen	- - -	**Y8241**

[1] BACnet Thermostat (**Y8241**) will control units with and without dehumidification. If there is a mix of units equipped with and without dehumidification on the same site, this thermostat can be used for all units if desired.

BACnet Controls (no reheat capability)	BACnet® Module (factory or field installed)	K0CTRL31A-2	**16X70**
	BACnet® Room Sensor with Display (field installed)	K0SNSR01FF1	**97W23**
	BACnet® Room Sensor without Display (field installed)	K0SNSR00FF1	**97W24**
Optional Accessories	Plenum Cable (RJ45/CAT5 75 ft.)	K0MISC00FF1	**97W25**

WEIGHT DATA

Model Number	Outdoor Coil	Net		Shipping		Outdoor Coil	Net		Shipping	
		lbs.	kg	lbs.	kg		lbs.	kg	lbs.	kg
024S Base Unit	Eco-Last™	530	240	571	259	Fin/Tube	566	257	607	275
024S Max. Unit	Eco-Last™	640	290	681	309	Fin/Tube	700	318	741	336
030S Base Unit	Eco-Last™	533	242	574	260	Fin/Tube	569	258	610	277
030S Max. Unit	Eco-Last™	643	292	684	310	Fin/Tube	703	319	744	337
036 Base Unit	Eco-Last™	555	252	596	270	Fin/Tube	588	267	629	285
036 Max. Unit	Eco-Last™	701	318	742	337	Fin/Tube	761	345	802	364
048 Base Unit	Eco-Last™	555	252	596	270	Fin/Tube	588	267	629	285
048 Max. Unit	Eco-Last™	716	325	757	343	Fin/Tube	776	352	817	371
060 Base Unit	Eco-Last™	649	294	690	313	Fin/Tube	682	309	723	328
060 Max. Unit	Eco-Last™	813	369	854	387	Fin/Tube	873	396	914	415
072, 074 Base Unit	Eco-Last™	649	294	690	313	Fin/Tube	[1] 682	[1] 309	[1] 723	[1] 328
072, 074 Max. Unit	Eco-Last™	813	369	854	387	Fin/Tube	[1] 873	[1] 396	[1] 914	[1] 415
090 Base Unit	Eco-Last™	783	355	843	382	Fin/Tube	848	385	908	412
090 Max. Unit	Eco-Last™	883	401	953	432	Fin/Tube	975	442	1045	474

[1] 074S models only.

OPTIONS / ACCESSORIES

		Shipping Weights	
		lbs.	kg
ECONOMIZER / OUTDOOR AIR / EXHAUST			
Economizer			
Economizer - Includes Barometric Relief Dampers and Exhaust Hood		131	59
Outdoor Air Dampers			
Motorized		40	18
Manual		30	14
Power Exhaust			
Standard Static		35	16
GAS HEAT			
Medium Heat (adder over standard heat)		8	4
High Heat (adder over standard heat)		19	9
DEHUMIDIFICATION SYSTEM			
Dehumidification Option (Net Weight)		27	12
ROOF CURBS			
Hybrid Roof Curbs, Downflow			
8 in. height		50	23
14 in. height		70	32
18 in. height		80	36
24 in. height		100	45
Hybrid Roof Curbs, Full Perimeter, Downflow			
8 in. height		57	26
14 in. height		60	27
18 in. height		91	41
24 in. height		114	52
Adjustable Pitch Curb, Downflow			
14 in. height		113	51
CEILING DIFFUSERS			
Step-Down	RTD9-65S	80	36
	RTD11-95S	118	54
Flush	FD9-65S	80	36
	FD11-95S	118	54
Transitions (Supply and Return)	T1TRAN10AN1	22	10
	T1TRAN20N-1	21	10

DIMENSIONS - UNIT

Model No.	CORNER WEIGHTS																CENTER OF GRAVITY							
	AA				BB				CC				DD				EE				FF			
	Base		Max.		Base		Max.		Base		Max.		Base		Max.		Base		Max.		Base		Max.	
	lbs.	kg	lbs.	kg	lbs.	kg	lbs.	kg	lbs.	kg	lbs.	kg	lbs.	kg	lbs.	kg	in.	mm	in.	mm	in.	mm	in.	mm
024	107	49	129	59	124	56	132	60	160	73	170	77	138	63	208	95	39-1/2	1003	45	1143	20-1/2	521	20-1/2	521
030	108	49	130	59	125	57	132	60	161	73	171	78	139	63	209	95	39-1/2	1003	45	1143	20-1/2	521	20-1/2	521
036	112	51	142	64	130	59	141	64	168	76	190	86	145	66	228	104	39-1/2	1003	45	1143	20-1/2	521	20	508
048	112	51	145	66	130	59	144	65	168	76	194	88	145	66	233	106	39-1/2	1003	45	1143	20-1/2	521	20	508
060	130	59	162	74	147	67	167	76	198	90	226	103	175	79	257	117	40	1016	44	1118	20	508	20	508
072	130	59	162	74	147	67	167	76	198	90	226	103	175	79	257	117	40	1016	44	1118	20	508	20	508
074	130	59	162	74	147	67	167	76	198	90	226	103	175	79	257	117	40	1016	44	1118	20	508	20	508
090	168	76	195	88	183	83	212	96	227	103	263	119	203	95	241	109	47	1194	47	1194	21	533	21	533

Base Unit - The unit with NO INTERNAL OPTIONS.

Max. Unit - The unit with ALL INTERNAL OPTIONS Installed. (Economizer, Standard Static Power Exhaust Fans, Controls, etc.). Does not include accessories external to unit or high static power exhaust.

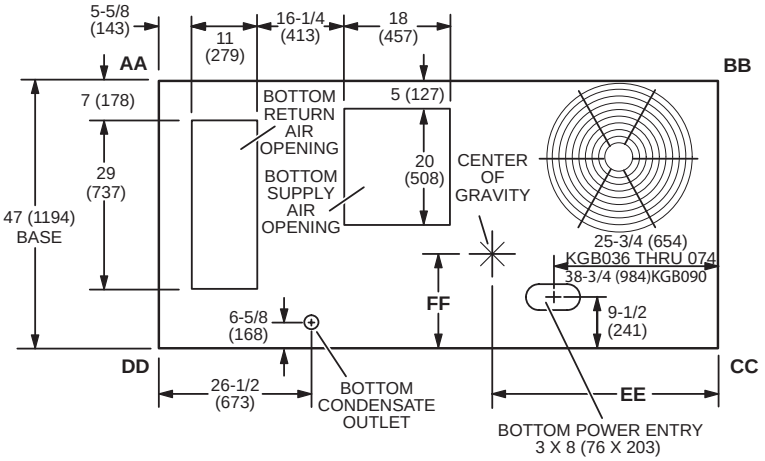

TOP VIEW (Base)

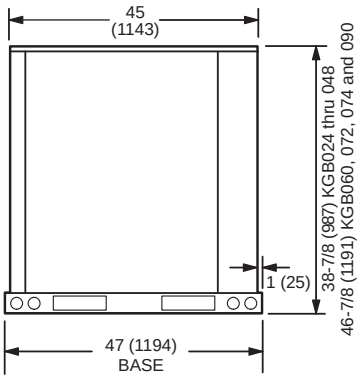

END VIEW

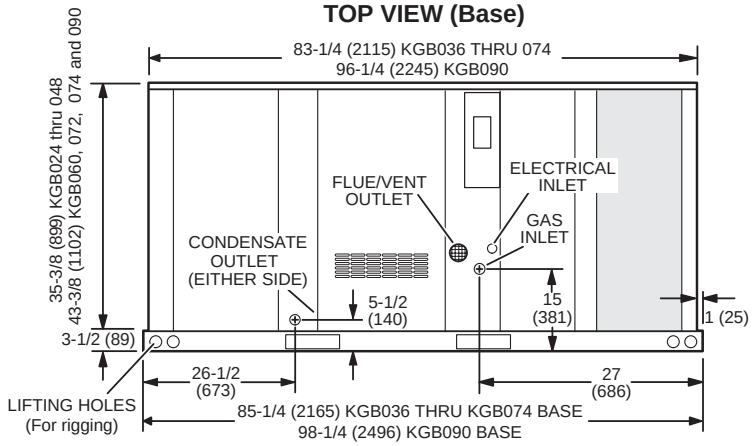

SIDE VIEW

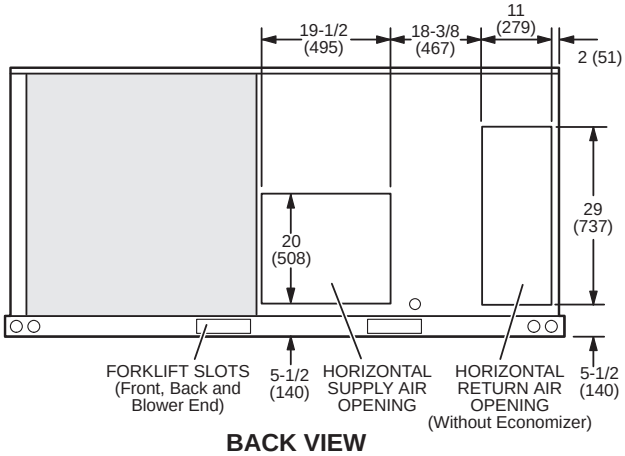

BACK VIEW

COMBINATION OUTDOOR AIR HOOD DETAIL FOR OPTIONAL ECONOMIZER AND BAROMETRIC RELIEF DAMPERS (Furnished With Economizer for Downflow Applications)

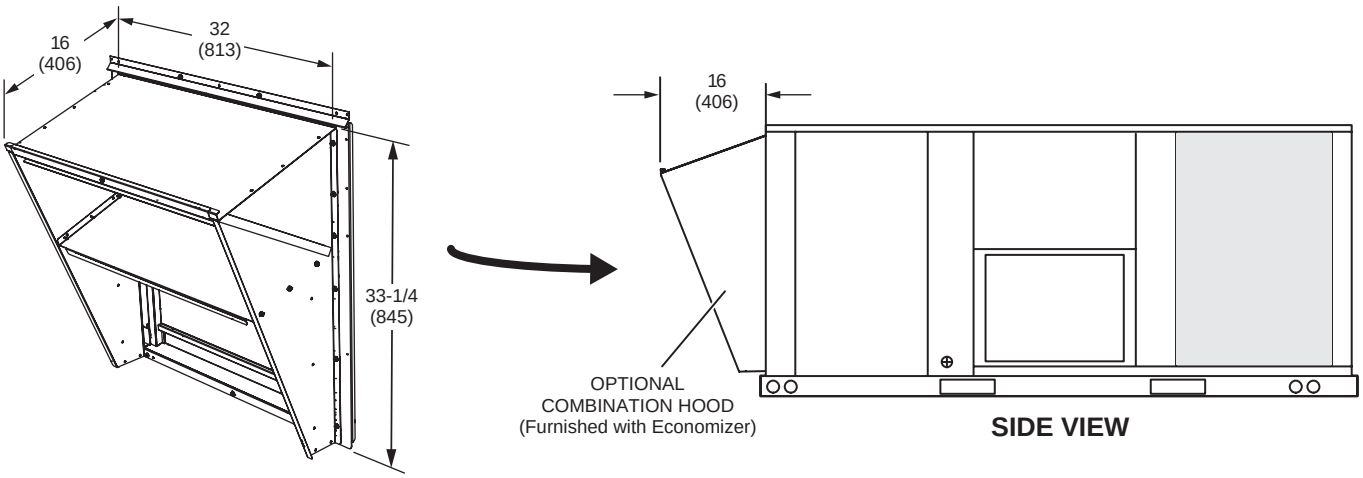

OUTDOOR AIR DAMPER HOOD DETAIL (Downflow or Horizontal Applications)

MANUAL OUTDOOR AIR HOOD

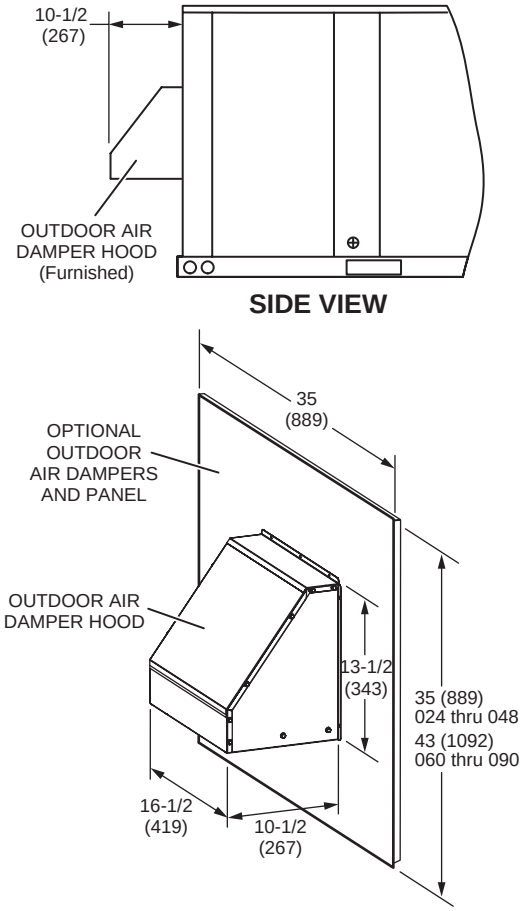

MOTORIZED OUTDOOR AIR HOOD

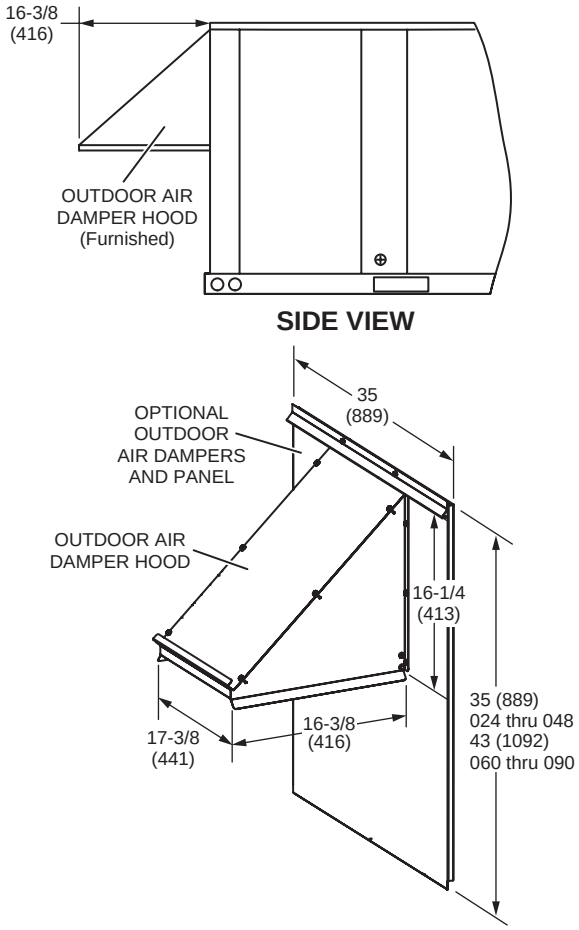

OUTDOOR AIR HOOD DETAIL WITH OPTIONAL ECONOMIZER AND OPTIONAL BAROMETRIC RELIEF DAMPERS WITH HOOD (Horizontal Application)

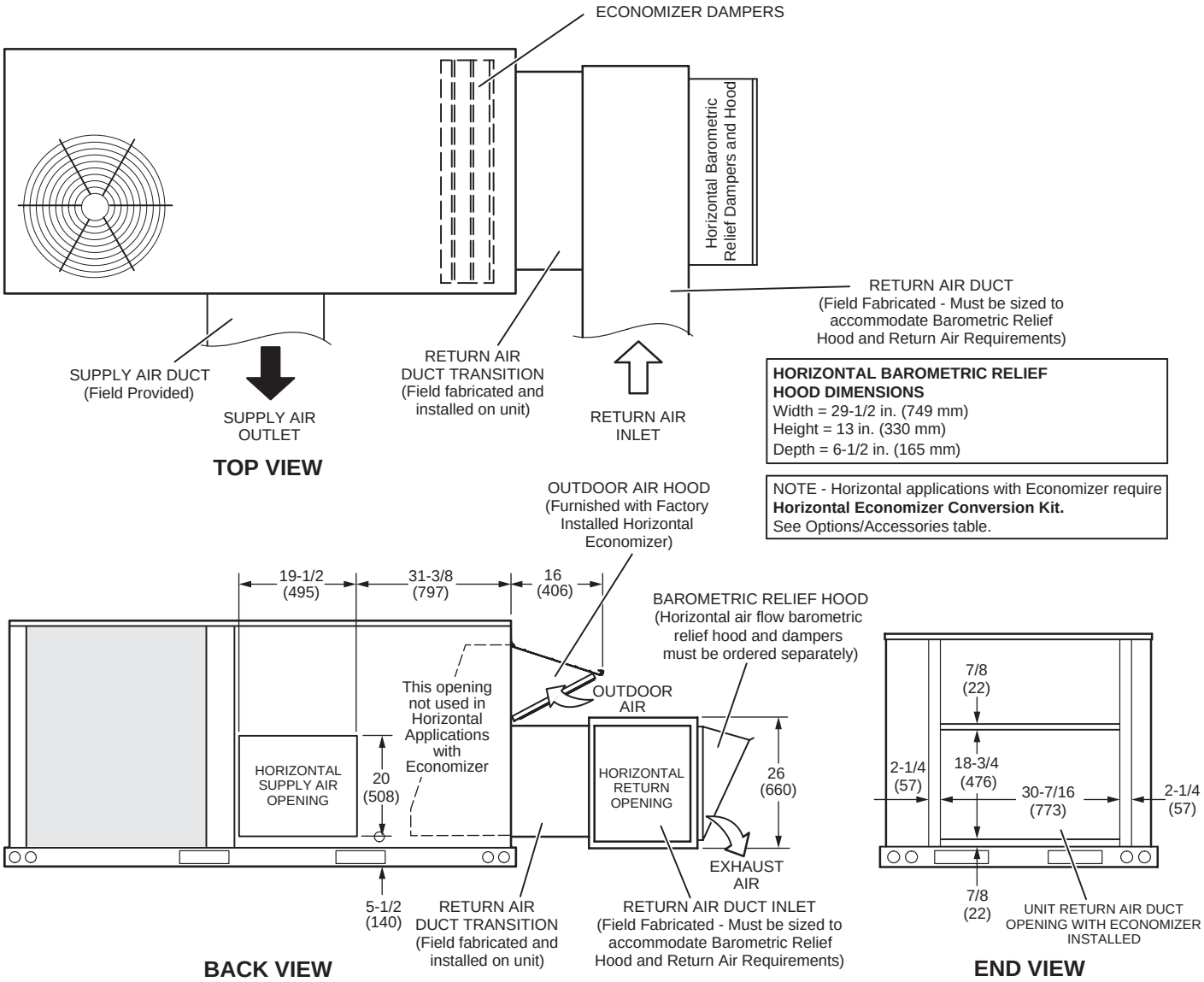

NOTE - Return Air Duct and Transition must be supported

HYBRID ROOF CURBS - DOUBLE DUCT OPENING - STANDARD AND FULL PERIMETER

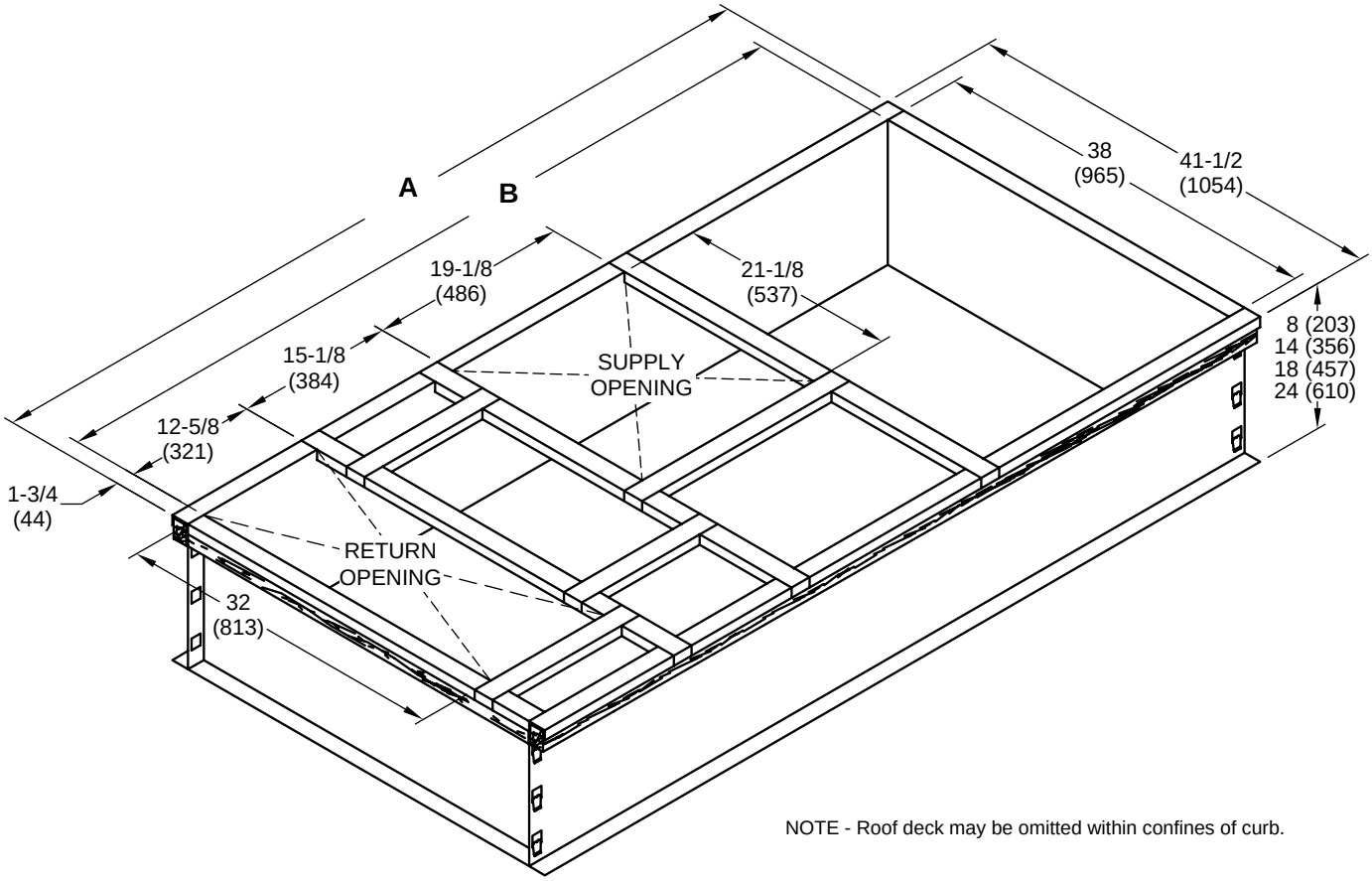

NOTE - Roof deck may be omitted within confines of curb.

TYPICAL FLASHING DETAIL FOR ROOF CURB

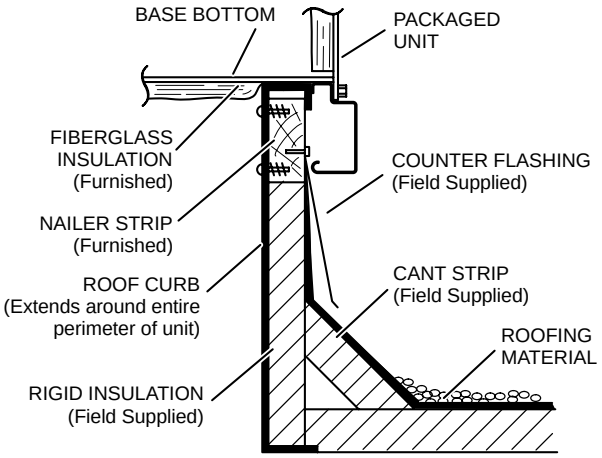

DETAIL ROOF CURB

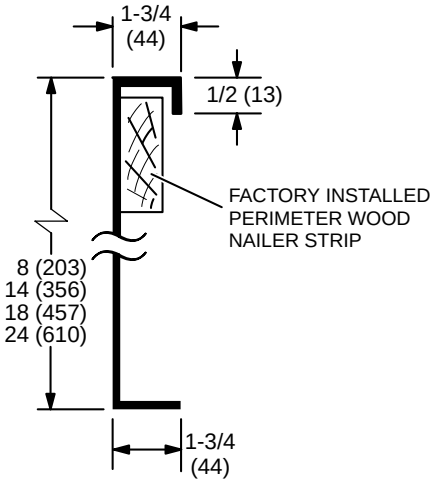

Model No.	A		B	
	in.	mm	in.	mm
Standard - 036, 048, 060, 072, 074 [1] 090	79-3/4	2026	76-1/4	1937
Full Perimeter - 090	92-3/4	2356	89-1/4	2267

[1] 090 models can be used on smaller 79-3/4 in. (2026 mm) roof curbs (not full perimeter) with 15-3/4 in. (400 mm) overhang at condenser end of unit. See dimension drawing on page 53

ADJUSTABLE PITCH CURBS - DOUBLE DUCT OPENING

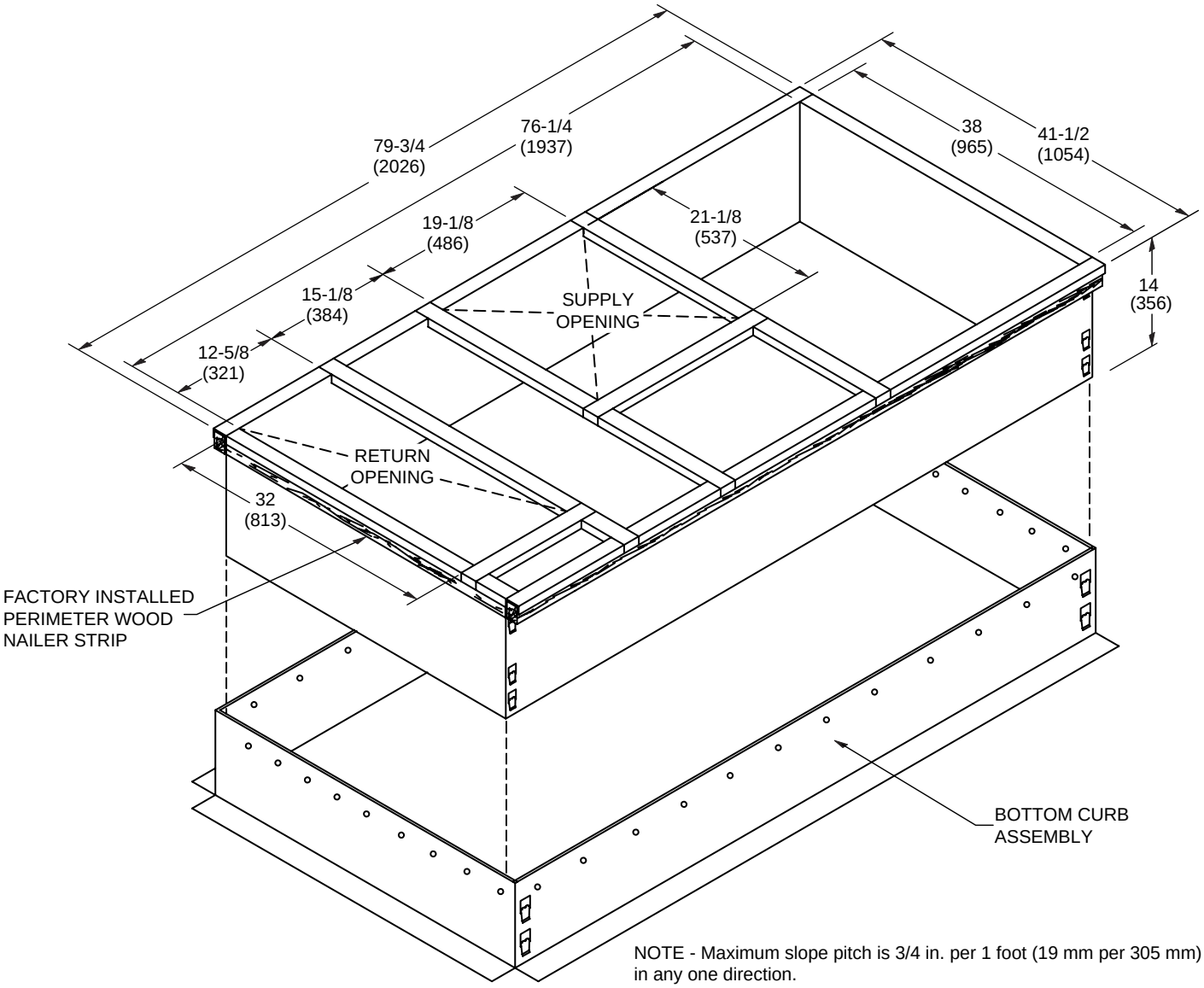

NOTE - Maximum slope pitch is 3/4 in. per 1 foot (19 mm per 305 mm) in any one direction.

TYPICAL FLASHING DETAIL FOR ROOF CURB

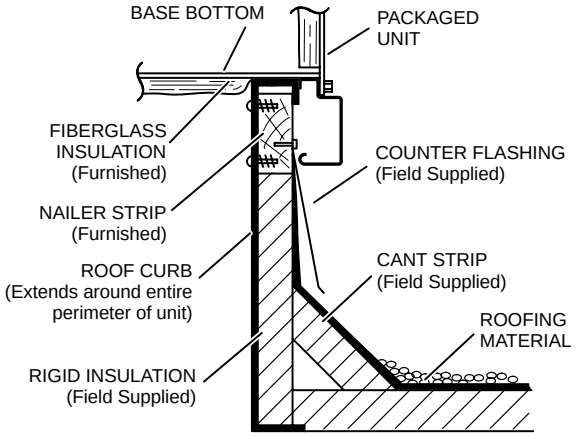

DETAIL ROOF CURB

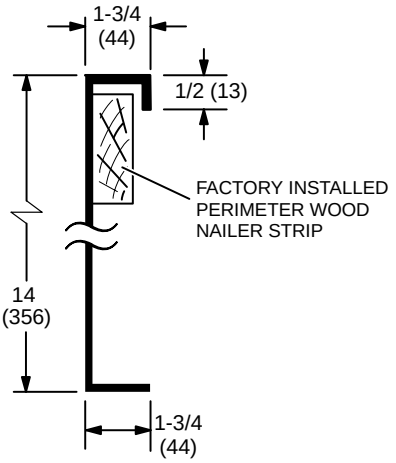

090 MODELS - SHOWING OVERHANG ON SMALLER 79-3/4 INCH LENGTH ROOF CURBS (Not Full Perimeter)

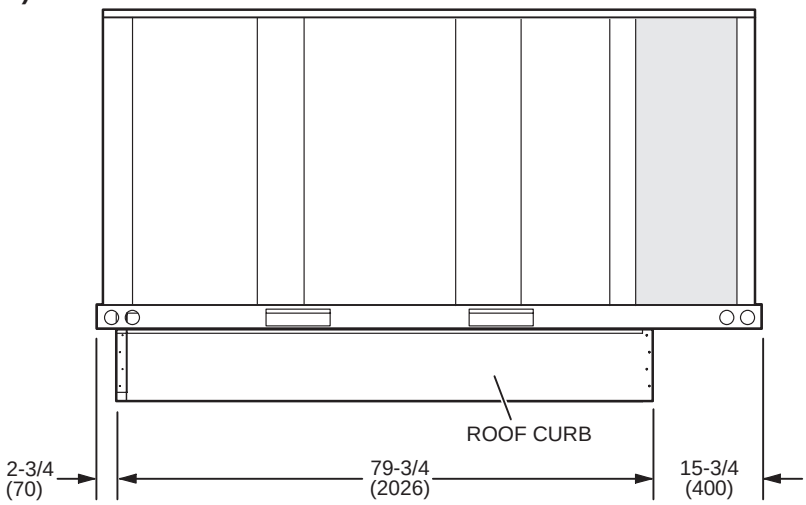

SIDE VIEW

TRANSITIONS

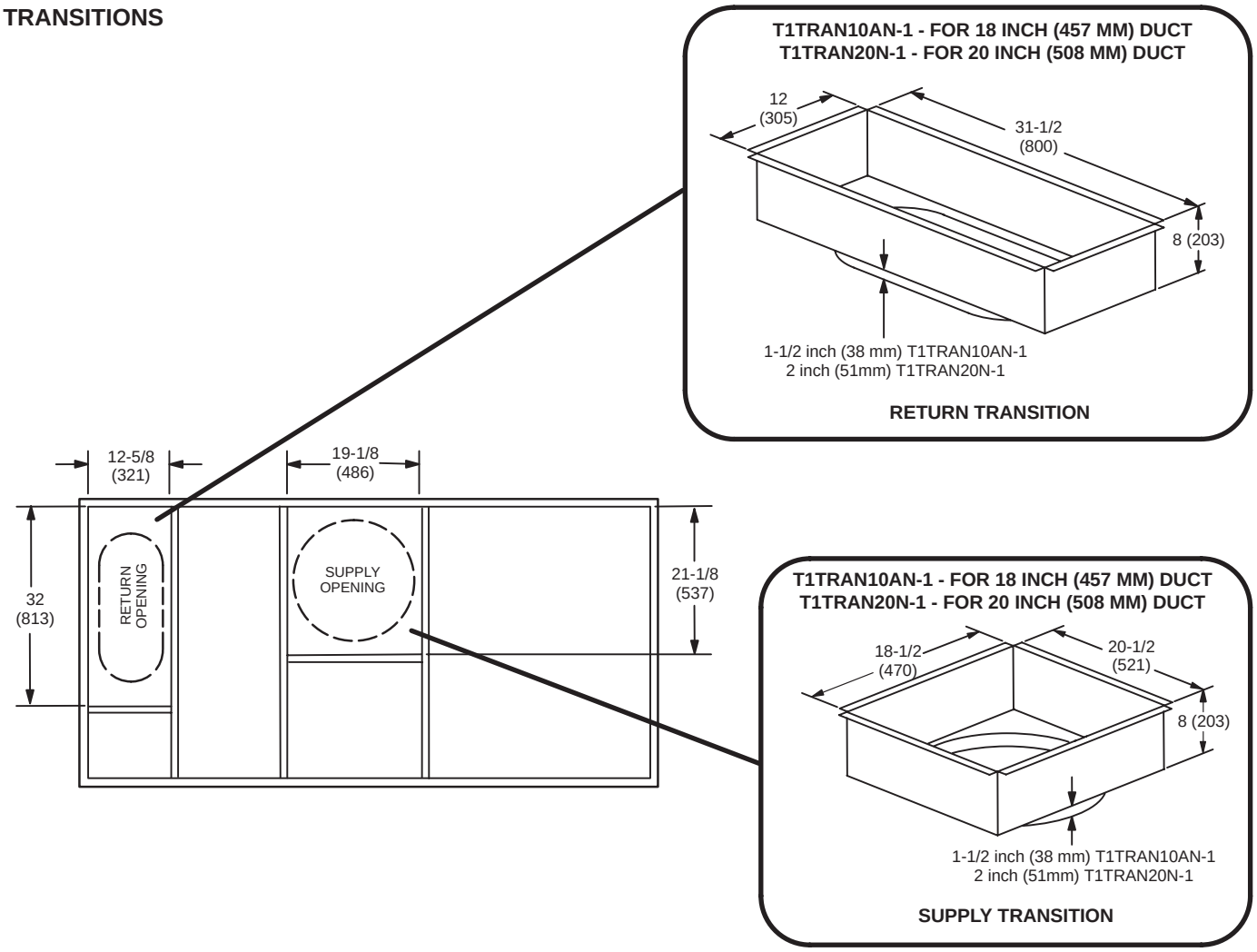

COMBINATION CEILING SUPPLY AND RETURN DIFFUSERS

STEP-DOWN CEILING DIFFUSER

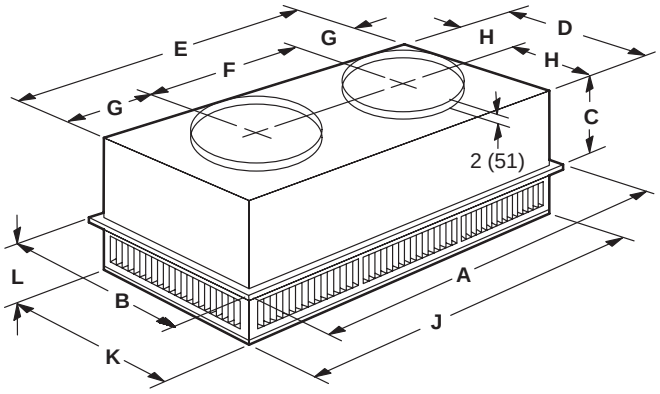

Model Number		RTD9-65S	RTD11-95S
A	in.	47-5/8	47-5/8
	mm	1159	1159
B	in.	23-5/8	29-5/8
	mm	600	752
C	in.	11-3/8	14-3/8
	mm	289	365
D	in.	21-1/2	27-1/2
	mm	546	699
E	in.	45-1/2	45-1/2
	mm	1156	1158
F	in.	22-1/2	22-1/2
	mm	572	572
G	in.	11-1/2	11-1/2
	mm	292	292
H	in.	10-3/4	13-3/4
	mm	273	349
J	in.	45-1/2	45-1/2
	mm	1156	1156
K	in.	21-1/2	27-1/2
	mm	546	699
L	in.	7-1/8	8-1/8
	mm	181	206
Duct Size	in.	18 round	20 round
	mm	457 round	508 round

FLUSH CEILING DIFFUSER

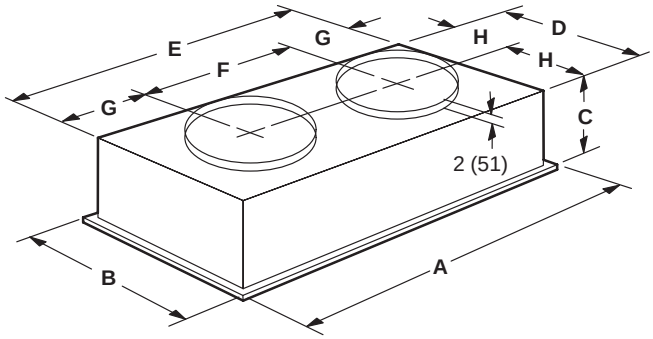

Model Number		FD9-65S	FD11-95S
A	in.	47-5/8	47-5/8
	mm	1159	1159
B	in.	23-5/8	29-5/8
	mm	600	752
C	in.	13-1/2	16-5/8
	mm	343	422
D	in.	21	27
	mm	533	686
E	in.	45	45
	mm	1143	1143
F	in.	22-1/2	22-1/2
	mm	572	572
G	in.	11-1/4	11-1/4
	mm	286	286
H	in.	10-1/2	13-1/2
	mm	267	343
Duct Size	in.	18 round	20 round
	mm	457 round	508 round

REVISIONS

Section	Description
Dimensions - Accessories	Updated drawings to show new Economizer Combination Outdoor Air Hood. Updated drawings to show horizontal applications with Economizer and Low Profile Barometric Relief Dampers.
Optional Accessories	Removed Barometric Relief Dampers with Exhaust Hood option (74W38). Added Barometric Relief Dampers for Power Exhaust Kit. Added Horizontal Low Profile Barometric Relief Dampers with Exhaust Hood. Removed furnished Dehumidistat from Reheat option. Added optional Dehumidistat for Reheat option.
Specifications	Added new ECM blower motor models.

Visit us at www.allied-commercial.com

For the latest technical information, visit us at www.allied-commercial.com

Contact us at 1-800-448-5872

NOTE - Due to Allied Commercial ongoing commitment to quality, Specifications, Ratings and Dimensions subject to change without notice and without incurring liability.
Improper installation, adjustment, alteration, service or maintenance can cause property damage or personal injury.
Installation and service must be performed by a qualified installer and servicing agency.

©2019 Allied Air Enterprises LLC, a Lennox International Inc. Company