PA740

Display size
22"-40"

Max load
80lb (36kg)

PARAMOUNT™

Articulating Wall Mount

FOR 22" TO 40" DISPLAYS

The Paramount™ series wall mounts provide versatile and multi-functional features. With PA740, extend the display up to 14.91" (379mm) or fully-retract it to just 2.80" (71mm) from the wall for the perfect viewing angle. The Hook-and-Hang™ system offers easy, one-person installation of the display. A ratcheting handle provides locking tilt capability for quick adjustments to the amount of tilt, reducing glare and optimizing the viewing angle. Integrated cable management protects, contains and conceals cables for a clean installation.

Full-motion capabilities allow you to swivel, tilt, extend or retract your display for the perfect viewing angle.

GET IT RIGHT™

Additional Features

- ☑ Extends 14.91" (379mm) from the wall
- ☑ Retracts to 2.80" (71mm) to save space
- ☑ +15/-5° of tilt for optimal viewing angles
- ☑ ±5° of roll for post installation display leveling
- ☑ Up to ±90° of pivot
- ☑ VESA® 100, 200 x 100, 200 x 200mm compliant
- ☑ Design is UL listed and tested to four times stated load capacity

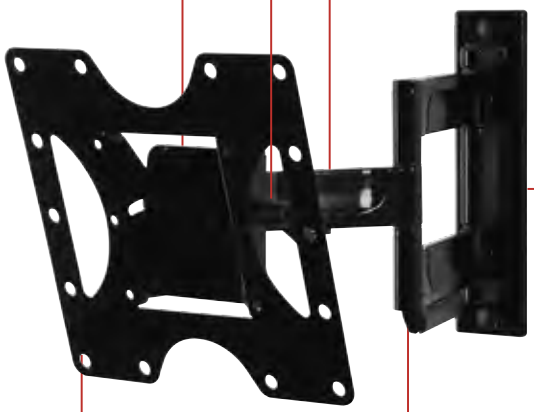

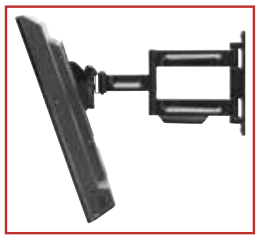

Swivel, tilt, extend or retract the display for the perfect viewing angle

Integrated cable management keeps cords and cables out of the way

Comes in color packaging with included installation hardware and easy to follow instructions.

ULTRA HD TV READY

PEERLESS-AV 4X SAFETY TESTED

RoHS

Please visit peerless-av.com/en-us/patents for patent information.

info@peerless-av.com
peerless-av.com

peerless-AV®

Model Numbers

WARRANTY: Limited 5-year

PA740	Paramount™ Articulating Wall Mount for 22" to 40" Displays

Product Specifications

	DIMENSIONS (W x H x D)	PRODUCT WEIGHT	LOAD CAPACITY	FINISH	AVAILABLE COLORS
PA740	9.40" x 8.74" x 2.80"-14.91" (239 x 222 x 71-379mm)	4.50lb (2.04kg)	80lb (36kg)	Scratch resistant fused epoxy	Gloss black

Package Specifications

	PACKAGE SIZE (W x H x D)	PACKAGE SHIP WEIGHT	PACKAGE UPC CODE	PACKAGE CONTENTS	UNITS IN PACKAGE
PA740	10.63" x 3.23" x 11.77" (270 x 82 x 299mm)	6.05lb (2.74kg)	735029256090	Wall mount, wall and display installation hardware, installation instructions	1

Accessories

WSP700/701: Metal Stud Wall Plates for 16"/24" Center Metal Studs
ACC4X4: VESA® 400 x 400mm Adaptor Plate

All dimensions = inch (mm)

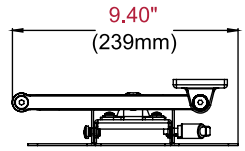

TOP VIEW

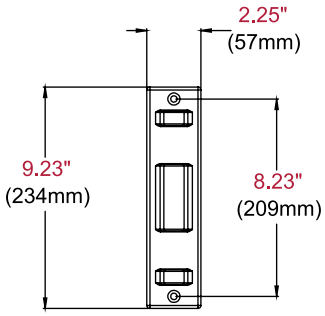

WALL PLATE DETAIL

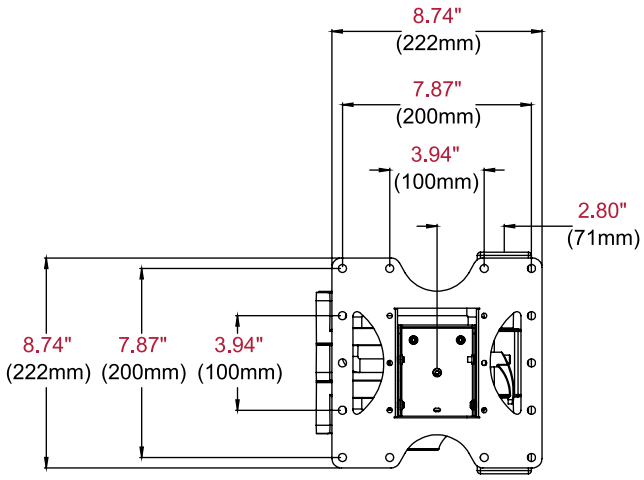

FRONT VIEW

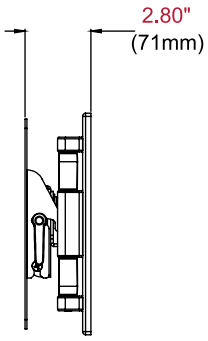

SIDE VIEW COLLAPSED

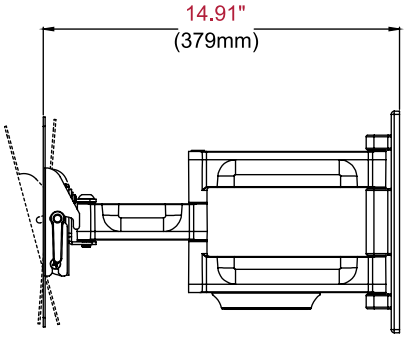

SIDE VIEW EXTENDED +15°/-5° TILT

Architect Specifications

The Paramount™ Articulating Wall Mount shall be a Peerless-AV model PA740 and shall be located where indicated on the plans. Assembly and installation shall be done according to instructions provided by the manufacturer.

Visit **peerless-av.com** to see the complete line of AV solutions from Peerless-AV, including outdoor displays, wireless, kiosks, digital audio, display mounts, projector mounts, carts/stands, and a full assortment of accessories.

Peerless-AV
2300 White Oak Circle
Aurora, IL 60502 USA

(800) 865-2112
(630) 375-5100
Fax: (800) 359-6500

Peerless-AV Europe
Unit 3 Watford Interchange
Colonial Way, Watford
Herts, WD24 4WP
United Kingdom
+44 (0) 1923 200100
Fax: +44 (0) 1923 200101

Peerless-AV de México
Ave de las Industrias 413
Parque Industrial Escobedo
Escobedo, N.L.,
Mexico 66050
+52 (81) 8384-8300
Fax: +52 (81) 8384-8360

LIT-1289

© 2015 Peerless Industries, Inc. Peerless-AV® is a registered trademark and Paramount™ is a trademark of Peerless Industries, Inc. All rights reserved.