Danze®

SPECIFICATIONS

TWO HANDLE WALL MOUNT LAVATORY FAUCET

Description

- Two handle wall mount w/concealed deck
- Touch down drain assembly

Flow & Valving

- See Chart

Standards

- ASME A112.18.1
- CSA B125
- NSF 61-9
- Energy policy act of 1992
- Listed IAPMO/UPC
- ADA Accessibility Guidelines for Buildings and Facilities - 4.27.4 Controls and Mechanisms

Warranty

Danze products are covered by a manufacturer's limited "lifetime" warranty for manufacturing defects.

D316557
OPULENCE™

Available Colors & Finish
- Chrome
- Antique Copper (AC)
- Brushed Nickel (BN)
- Satin Black (BS)
- Polished Brass (PBV)
- Polished Nickel (PNV)
- Oil Rub Bronze (RB)

Trim Kits : (for use w/ rough-in valves)
D316457T

Special Packaging
- This product also available with trim and valve packaged separately.
- Use with rough-in valve D106100BT: Combination 1/2" copper sweat/IPS connection
- Model numbers for trim kit items include the suffix "T"

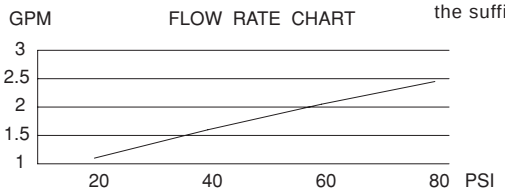

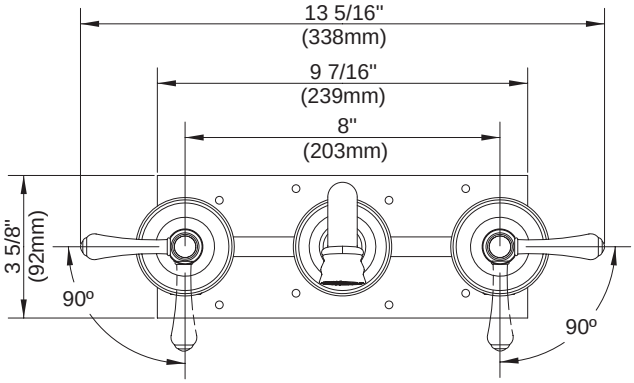

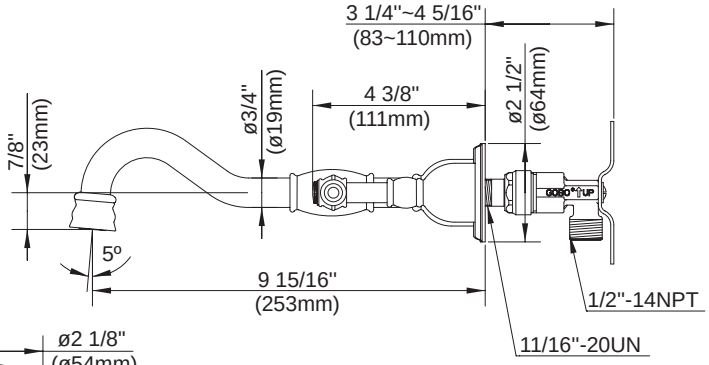

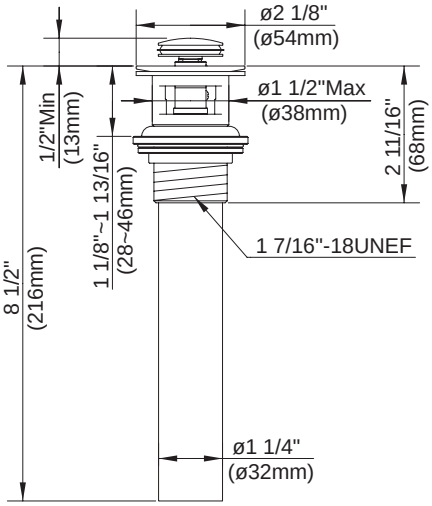

Specific Features: _____ *Submitted Model No.:* _____

Danze, Inc., 2500 Internationale Parkway, Woodridge, IL 60517, USA WWW.DANZE.COM